Pixel/Beam Pipe Installation

IDSG

May 16, 2001

M. Gilchriese

General Design Requirements

- Baseline in blue. *Proposals or comments in red.*
- Complete pixel detector installation to be done in “long access” now renamed “IDET removal” configuration.
- Installation of B-layer without breaking beam pipe vacuum is required. *The pixel group is requesting study of alternative wherein the B-layer <u>must be</u> installed together with the rest of the system/beam pipe on the surface.*
- Beam pipe bakeout can be done with the B-layer in place. *However, this will not be confirmed until passing Eng. Design Review of the beam vacuum system, anticipated to occur end of 2001.*
- Pixel system + beam pipe to be assembled on surface, lowered as a package and rolled into the pixel support tube.
- Design of pixel support tube allows for X or Y motion of the beam pipe relative to ATLAS by up to 9mm(with access to the ends of the support tube).

Implications of Requirements(1)

- Capability to deliver 7.5m-long “package” to end of support tube. Preliminary look by TC - OK.
- Practically, the cradle will also serve to hold the pixel system during final(at least) surface testing. Must have thermal control, Faraday screen…in addition to mechanical support.

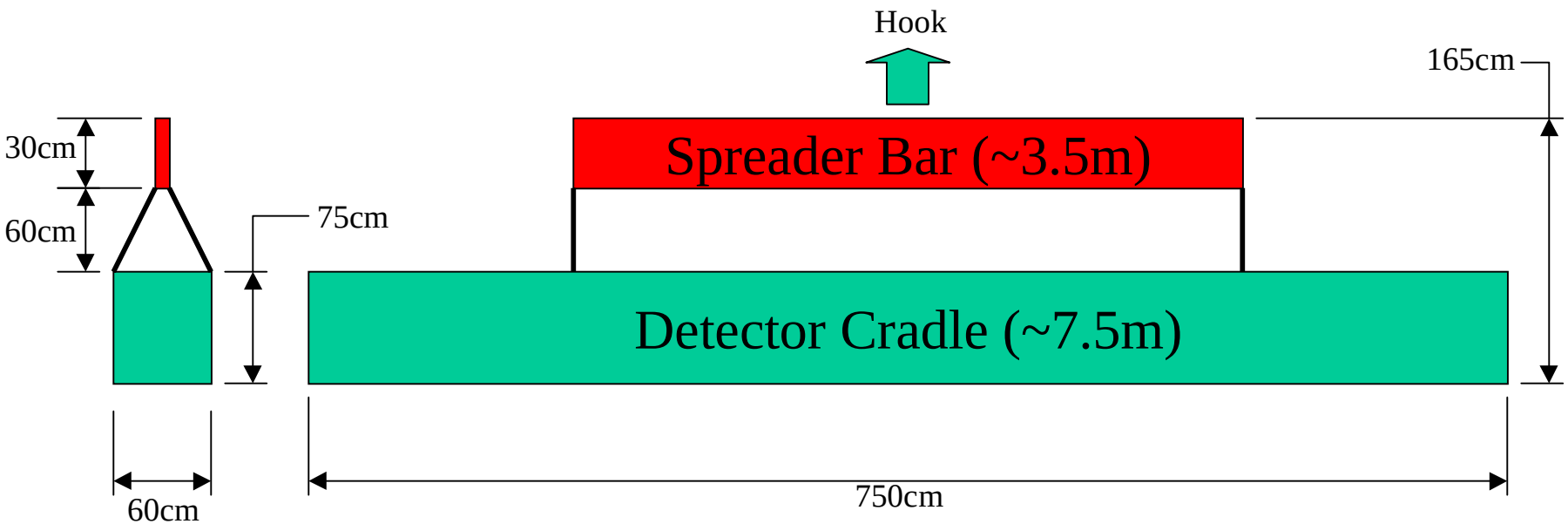

Implications of Requirements(2)

- SR building configuration to allow surface assembly of pixels+beam pipe into “installation cradle”. This requires >15m of space in long direction of cradle. Preliminary look by Geoff - OK.
- Plan for temporary(2nd) beam pipe in case pixels do not meet schedule. ATLAS must make formal request. Has been/about to be made? Nature of temporary pipe?
- Assembly/installation schedule “what ifs” need to be worked out in more detail. May have some impact on support tube/endplug design.
  - Pixels ready for 2005 installation or Pixels installed in 2006 shutdown.. Temporary beam pipe in 2005 or some of both eg. all but B-layer in 2005, B-layer in 2006.
  - If 2-hits initially, time to add third hit/layers.
  - More realistic time estimates for installation/test will take many months of work - see mockup discussion
  - Must retain flexibility in schedule until have better information.

Brief Status of Support Tube

- Desired support conditions defined - see next page.
- Basic design, shells + flanges, defined, and some preliminary FEA and other analysis done - see appended notes from N. Hartman.
- Vendor interactions started(on flanges).
- SCT interfaces
  - Study of impact of load conditions started
  - Geometrical interfaces started
  - Dedicated meeting shortly(today?) on these issues.
- Beam pipe interfaces - no real work yet. Beam pipe will slide/roll into tube in manner similar to pixel parts. Hytec just asked to begin work on translation mechanism.
- Pixel interfaces - too detailed for discussion here.
- Other interfaces - support to cryostat, polymoderator…detailed work just starting.

Desired Support Conditions of Pixel Support Tube

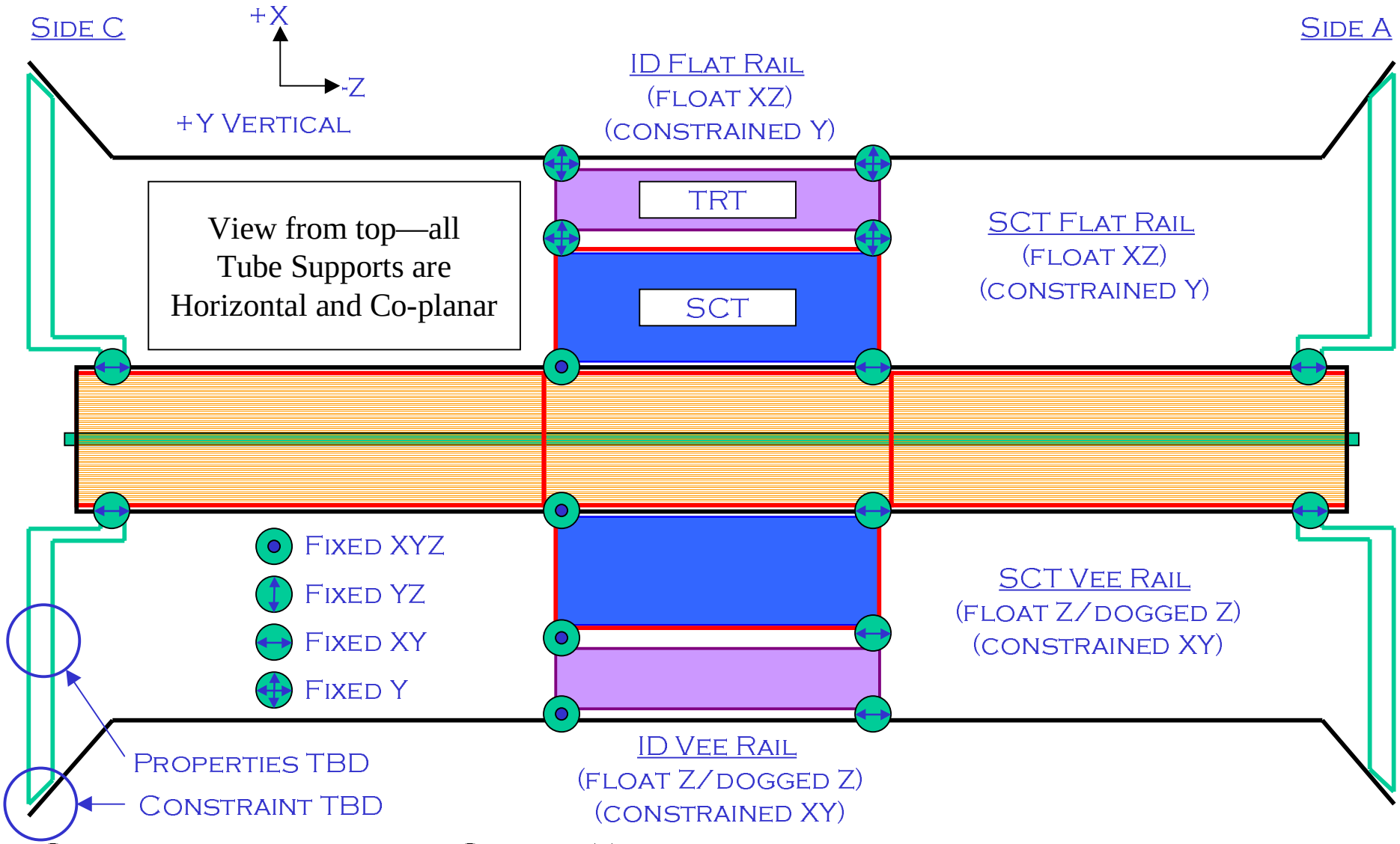

Support condition of Pixel Support Tube intends to couple in stiffness across diameter
Support of ID components shown to indicate relation of Support tube supports

Assembly/Installation

- Must understand and validate pixels+beam pipe assembly and installation steps in detail => mockup.
- Mockup of support tube largely complete at LBL. Mockups of pieces(pixel frame, …) started. Eventually all relevant pieces should be added(including beam pipe).
- Lengthy program of trying assembly procedures. Duration, complexity will not be clear until have more experience but certainly first stage will go through this year.

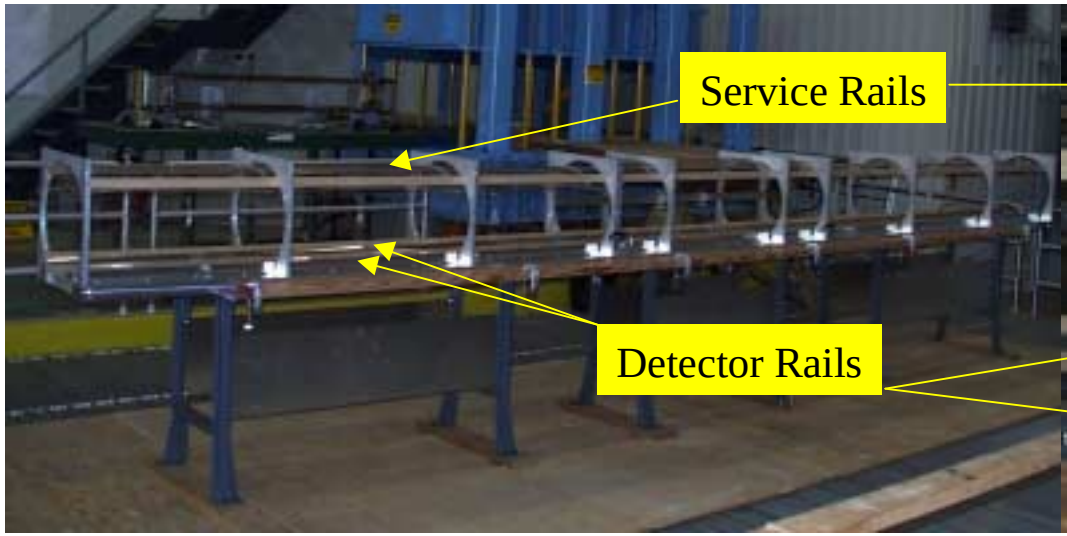

Plan and Work Organization

- Plan -> ECR
  - Some uncertainties will remain for “insertable” ECR to be made this summer
    - B-layer presence during bakeout.
    - Option of B-layer installed only on surface needs to be addressed by time ECR submitted.
    - Final asssembly/test/installation/test schedule. Some planning can be done but will not be validated by experience with mockup.
- Organization
  - Many interfaces to support tube.
  - Need regular exchange among relevant parties from (SCT, beam pipe, pixels, ..) and support tube designers.
  - Regular, monthly meetings to start. Practically these must be mostly by TV/phone with in-person meetings about 3 times per year.
  - Attempt to put interfaces under change control as soon as possible as means to exchange information.

Pixel Support Tube Analysis

Prepared for IDSG

May 16, 2001

Pixel Detector

Gravity Sag Calculations – pixel in FORWARD tube

Support Locations and Expected Deflections for Tube/Pixel Combo

Standard Beam Bending Calculations - no local effects considered.
Effect of Forward Tubes (mass and stiffness) IS NOT CONSIDERED HERE.

Case 1 - Pixel Detector Supported at Ends:

All pixel mass evenly distributed between the ends of frame.

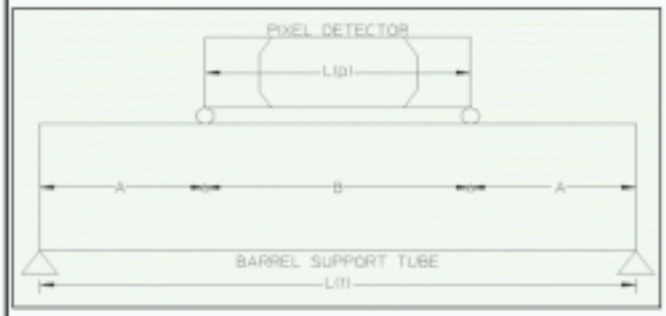

Deflection in Pixels Alone (due to given mass):		
Pixel weight per length =	385.3928571	N/m
Pixel Deflection at Center =	19.17	microns
Deflection in Tube Alone:		
Tube cross area =	1084.922505	mm^2
Tube weight per length =	16.68382029	N/m
Tube inertia =	19299475.92	mm^4
Rib Inertias (trans axis) =	19209960	mm^4
Total Support Tube Inertia =	38509435.92	mm^4
Tube Deflection at Center =	2.63	microns
Deflection in Tube from Pixel Load:		
Tube Load from Pixels =	269.775	N
Load position (A) =	0.6	m
Tube Deflection at A =	23.16	microns
Tube Max. Deflection (center) =	33.6689347	microns
Tube Max. Deflection if Cantilevered Beam (under P) =	418.8005636	microns
TOTAL PIXEL DEFLECTION =	**44.9587096**	**microns**

Pixel Info:

Assumes 300 micron face sheets for 216 mm envelope frame - actual fiber weight is ignored. Tubes, foam, adhesive are ignored, and the lightweighting fraction is assumed to be 50%. Detector is assumed uniform along length (in mass, too).

Pixel Inertia =	7183936.77	mm^4
Pixel Cross Area =	377.3317037	mm^2
Pixel Mass =	55	kg
Pixel Length =	1.4	m
Frame Modulus =	140	Gpa
Frame Density =	0.06	lb./cu. in.
Dist. Between Cones =	0.8	m

Support Tube Info:

Assumes annular shell with isotropic layup. Ribs are assumed to have inertia due to mass and position only, not actual shape.

Shell Dia. =	462	mm
Shell Thickness =	0.5	mm
Barrel Length =	2.6	m
Shell Modulus =	98	Gpa
Shell Density =	0.06	lb./cu. in.
Number Ribs (top OR bottom, NOT both) =	6	#
Rib Area =	30	mm^2

Deflections in Support Tube and Pixel detector:

- based on gravity sag alone
- assumes only beam deflection (and thus not conservative)
- however, assumes no adjacent tube section (barrel), and is thus conservative in this respect

FEA Model – Important Features

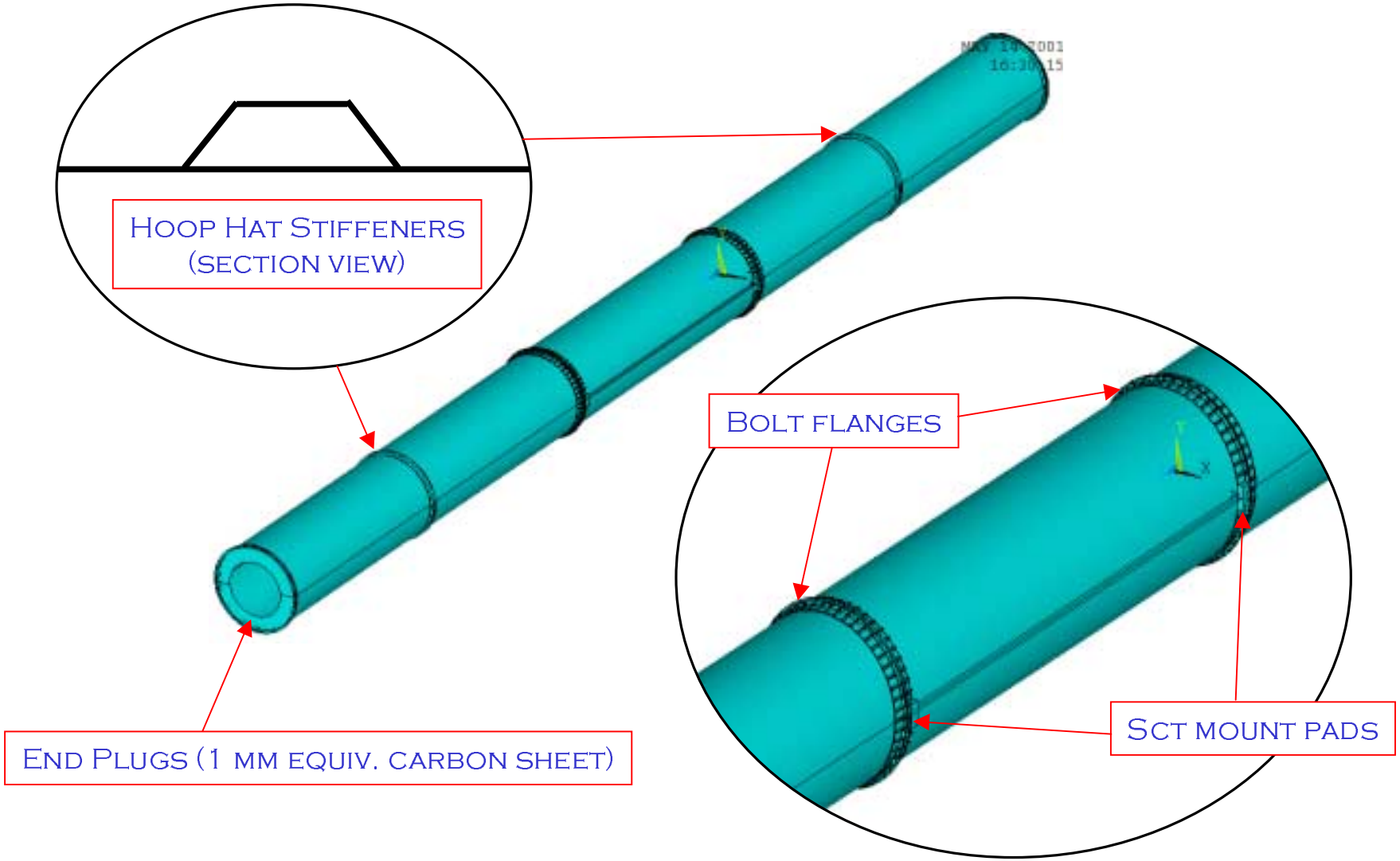

Pixel Detector

Support Tube – Flange Details

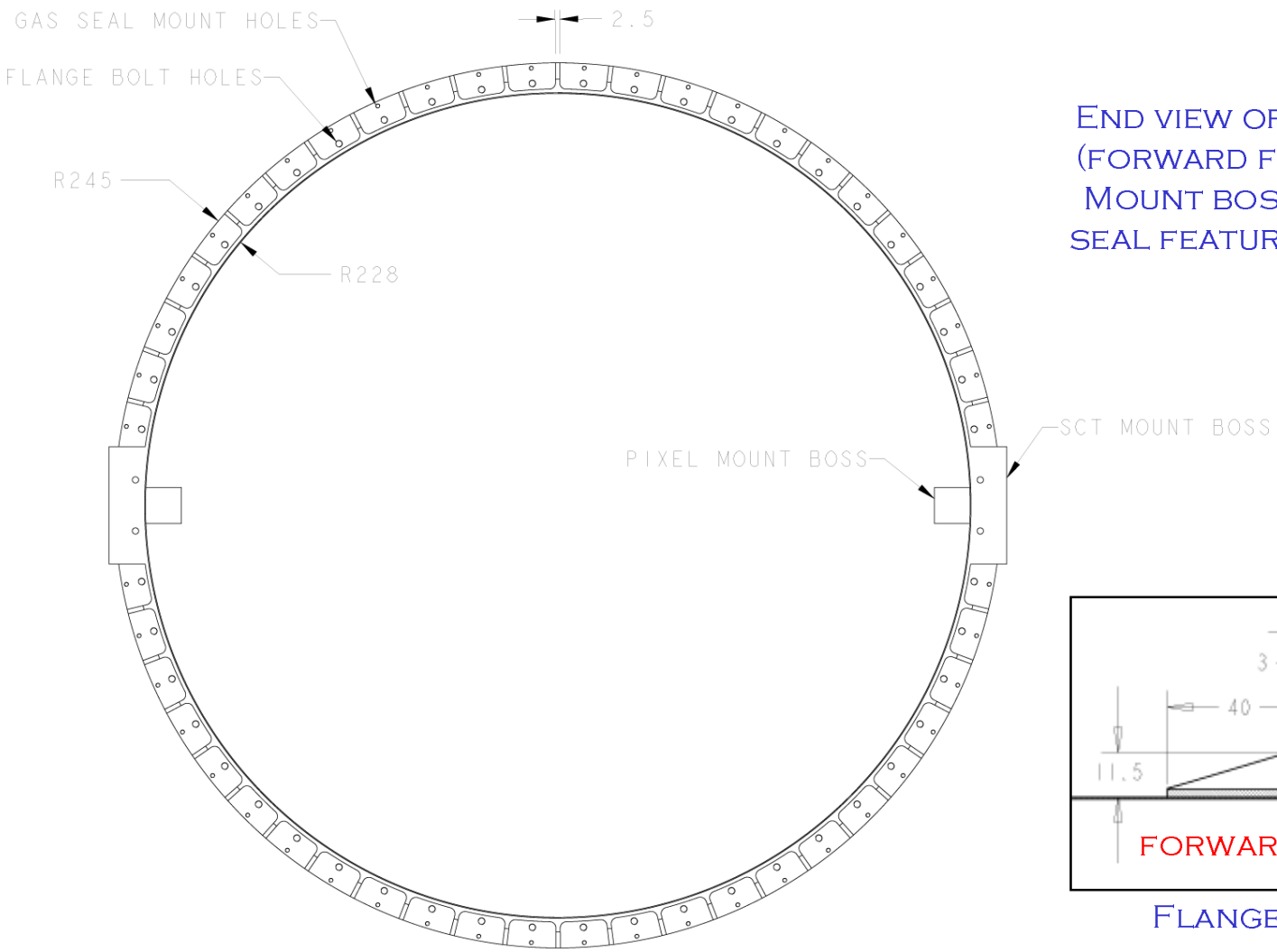

End view of barrel flange (forward flanges have no Mount bosses and no gas seal features – see below)

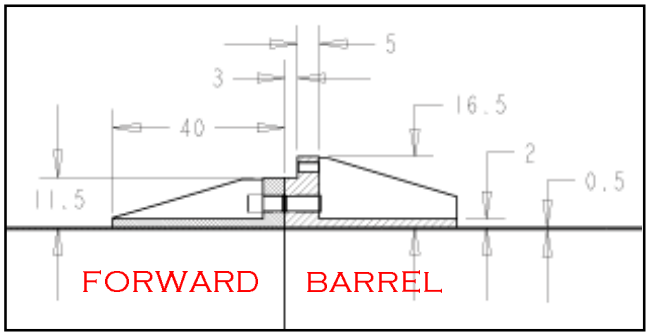

Flange x-section detail

FEA Model – Effect of End Plugs

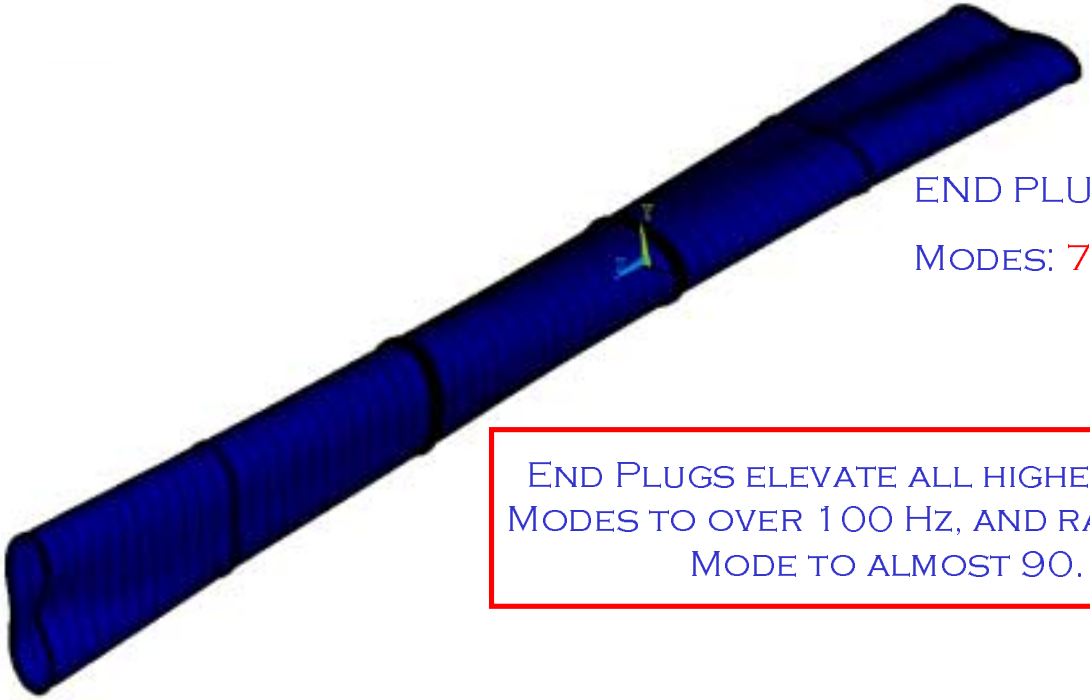

End plugs removed

Modes: 74 / 77 / 106 / 111

End Plugs elevate all higher order Modes to over 100 Hz, and raise first Mode to almost 90.

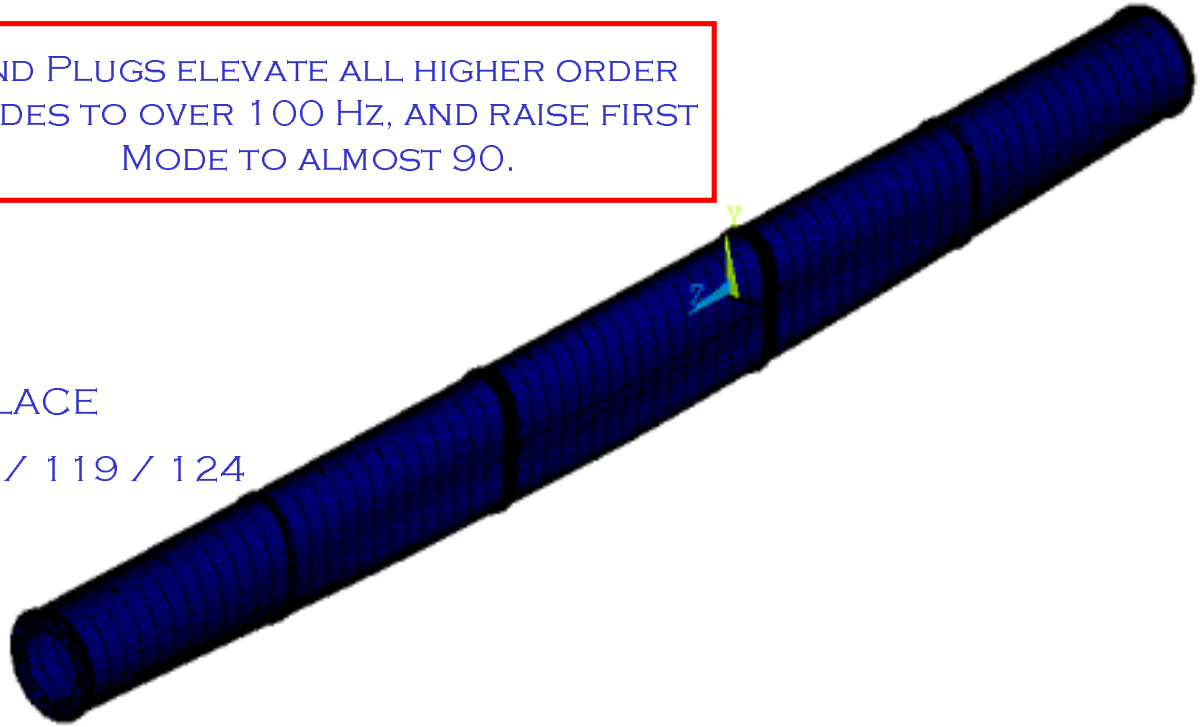

End plugs in place

Modes: 89 / 118 / 119 / 124

FEA Model – Effect of Hoop Stiffeners

WITHOUT HOOPS

Modes: 68 / 68 / 69 / 69*

Although hoops lower the fundamental frequency slightly, they completely eliminate all hom's below 100. This is important in the forwards, where the distributed service masses are hanging.

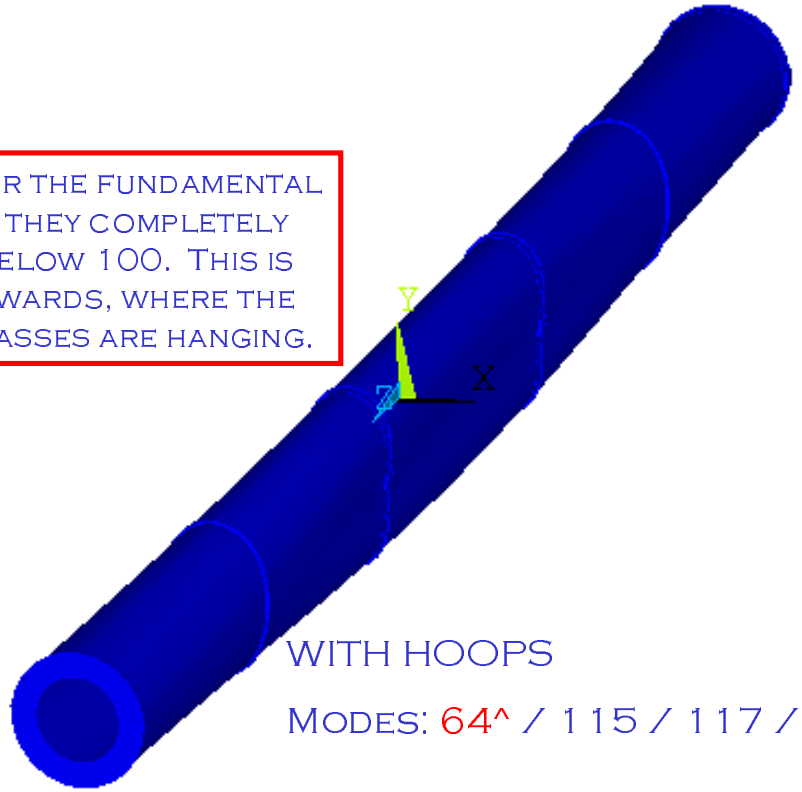

WITH HOOPS

Modes: 64^ / 115 / 117 / 118

*modes are very close in frequency,but differ in shape
^Frequencies different from previous design due to different flange design, however, above models are same in all ways except for the presence of hoop stiffeners

FEA Model – Effect of End Fixation

ENDS FREE

Modes: 31 / 48 / 55 / 62

END SUPPORTS ARE *CRITICAL!!!*

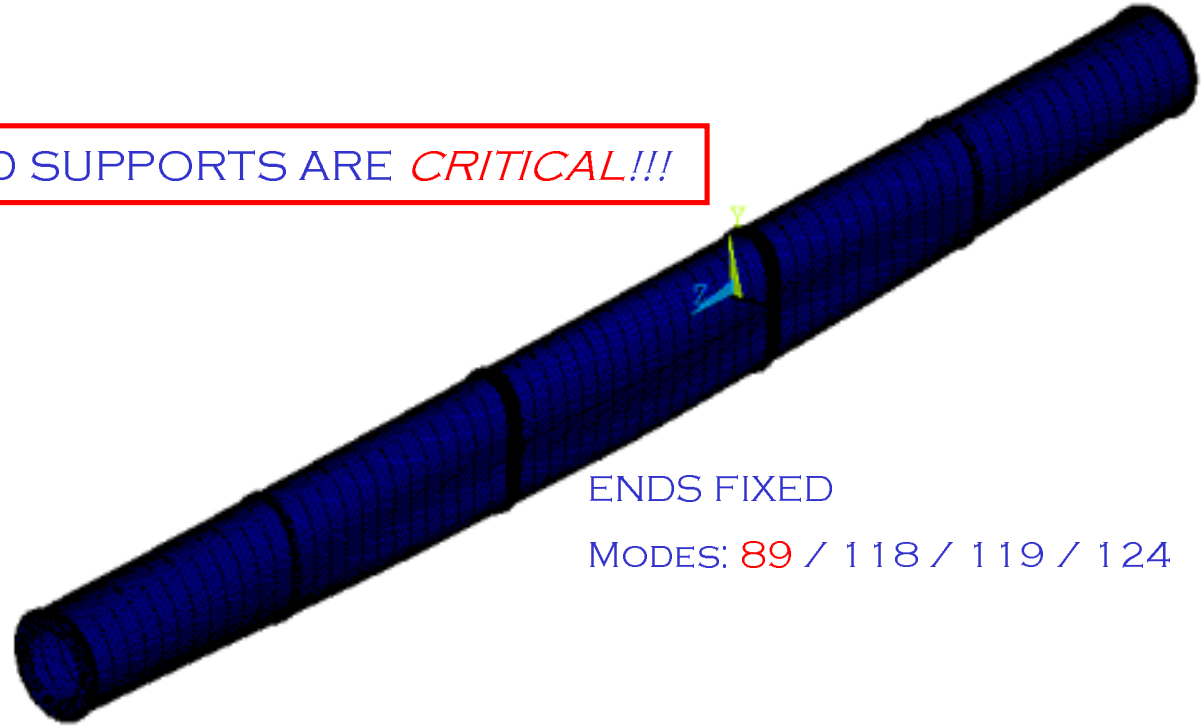

ENDS FIXED

Modes: 89 / 118 / 119 / 124

Conclusions/Recommendations

- **Further analysis must be conducted with pixel mass**
  - However, pixels will be weakly coupled to support tube due to fixation scheme
  - Installation deflections (from gravity) appear to be low, but shell components in support tube must be analyzed
- **Recommended shell features**
  - End plugs must be structural
    - Raises fundamental frequency somewhat (~20%)
    - Raises Hom's to above 100 Hz
  - Hoop stiffeners are needed
    - Eliminates all forward shell modes below 100 Hz (except fundamental)
    - Much more efficient than cored structure (less mass)
  - Ends MUST be supported
    - Fundamental frequency nearly triples!
    - Many Hom's below 100 Hz are eliminated