Pixel Prototype Cables
and
Service Integration with Module

June 3, 1999

Module Meeting

E. Anderssen, LBNL/CERN

Module/Power supply Parameters

	Voltage		Current		Line Drop		Type I	Type II	Type III	Type IV	Type V	Pigtail
Power Supply	*Max*	*Nominal*	*Max*	*Nominal*	*Allowed*	*Worst Case*	*Actual*	*Actual*	*Actual*	*Actual*	*Nominal*	*Nominal*
VDD	6.000	4	2	1.52	2	2.067	0.415	0.376	0.272	0.554	0.200	0.250
VDDA	6.000	3.5	1.2	1.08	2	1.942	0.295	0.267	0.303	0.626	0.200	0.250
VCCA	4.000	1.75	1.5	1.44	2	1.982	0.393	0.357	0.258	0.525	0.200	0.250
VVDC	-	4	-	0.1	-	1.490	0.207	0.746	0.028	0.058	0.200	0.250
VPIN	-	10	-	0.0005	-	-	-	-	-	-	-	-
ISET0	-	-	-	-	-	-	-	-	-	-	-	-
ISET1	-	-	-	-	-	-	-	-	-	-	-	-
RESET	-	-	-	-	-	-	-	-	-	-	-	-
VDET	-	700	0.004	-	-	-	-	-	-	-	-	-

- **Numbers used to size cables are for worst case at the end of life**
  - Estimate based on current prototype electronics
- **Current quoted above is for Two modules in parallel**
  - B-Layer modules may have up to 30% more dissipation and use different table/cable sizes
- **Cable Chain out to Racks has been sized and needs review**
- **Cable Performance requirements have not been considered**
  - Capacitance, noise rejection, EMI
  - performance of 140m chain
  - Impact on performance due to connectors
  - Twisted Pair
- **System test of full length cables with flex planned for summer 99**

Cable Plant

- Design to integrate bundles well with Structure/Modularity
- Cables sized based on local optimizations, e.g. mass, voltage drop for a given region
- Overall Voltage Drop limited to 2.0V
- PP3 introduced to allow for jump to larger size for long run

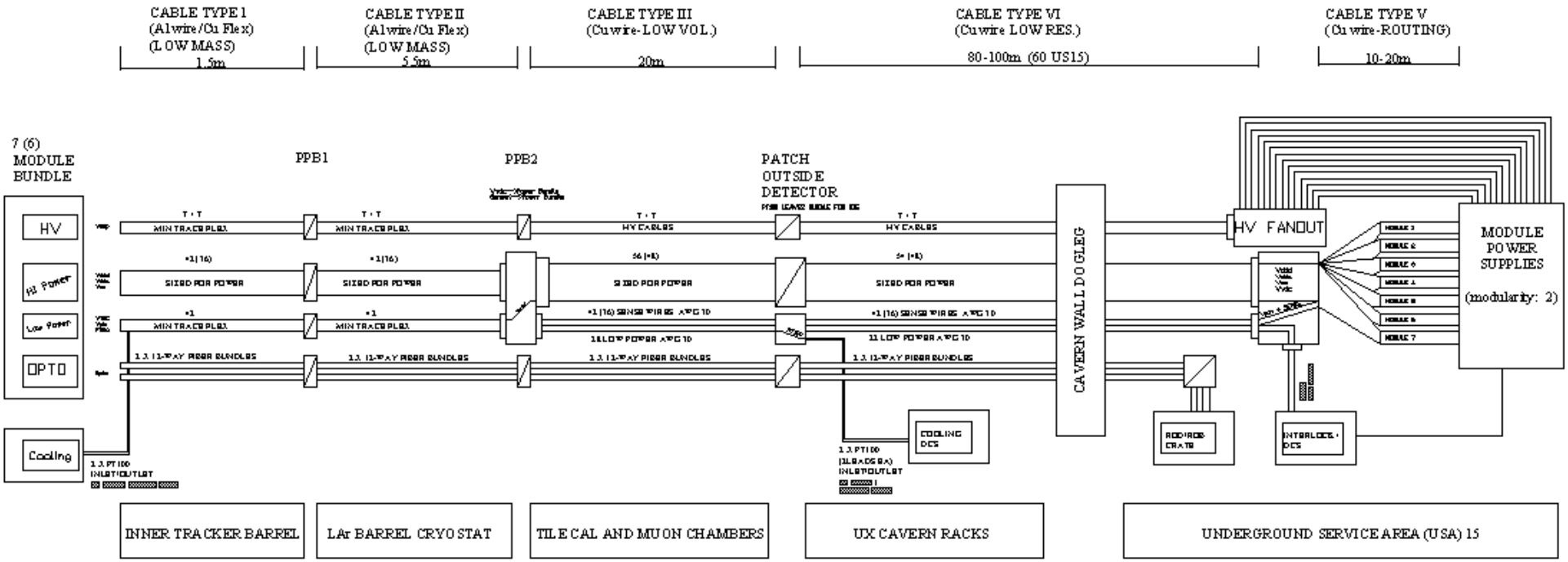

Pixel Detector

B-Layer Services are Different

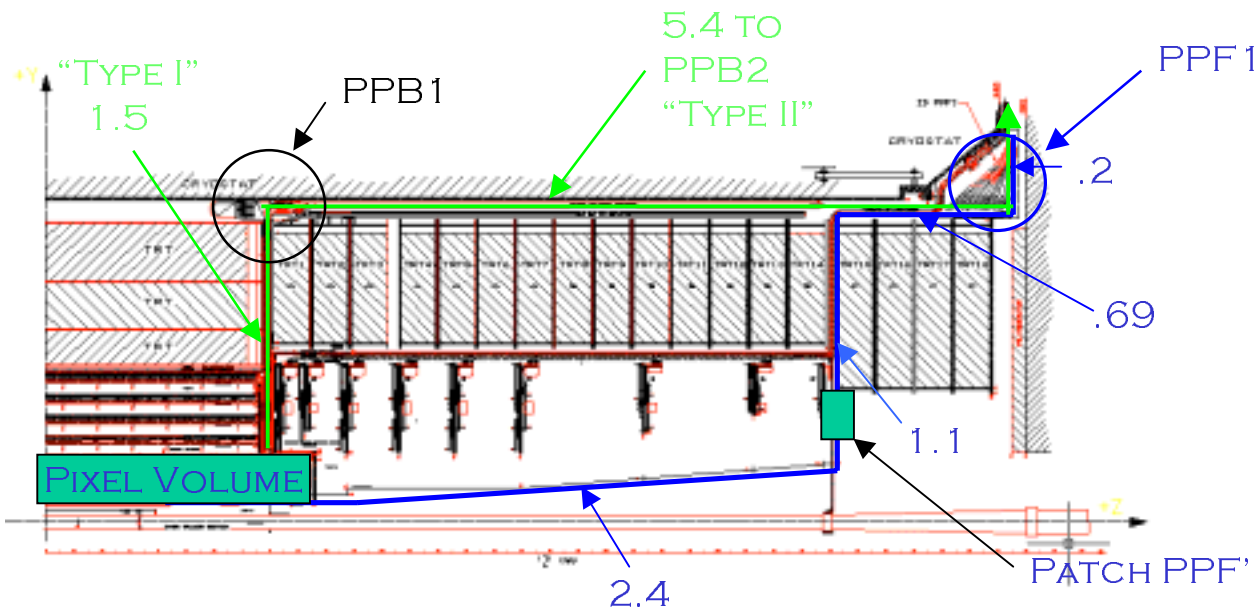

B-Layer routing is shown in Blue, the rest of the Pixel services are routed along the green path.

- Power cables change size at PPB1 and PPF1 from "Type 1" to "Type 2"
- Type 1 is sized for the 1.5m run from inside Pixel Volume to PPB1 through "GAP"
- For B-Layer, this leads to an excessive voltage drop if transition must occur at PPF1
  - Type I is only sized for 1.5m length
- Nominal Drop in type 1 & 2 is 0.4V-Type 2 is usually 5.4m long, but for B-Layer is 2.7(+)
  - Propose to Increase Type II cross section slightly and either:
    - Increase Wire sizes to make Type IB @ 0.6V for 3m length (slightly more massive)
    - make a type I cable with length 2.25m (150% length of type 1 cable) to make voltage drop of 0.6V (Introduces auxiliary transition in addition to Patch Panel)

Worst Case Routing to the Racks (USA15)

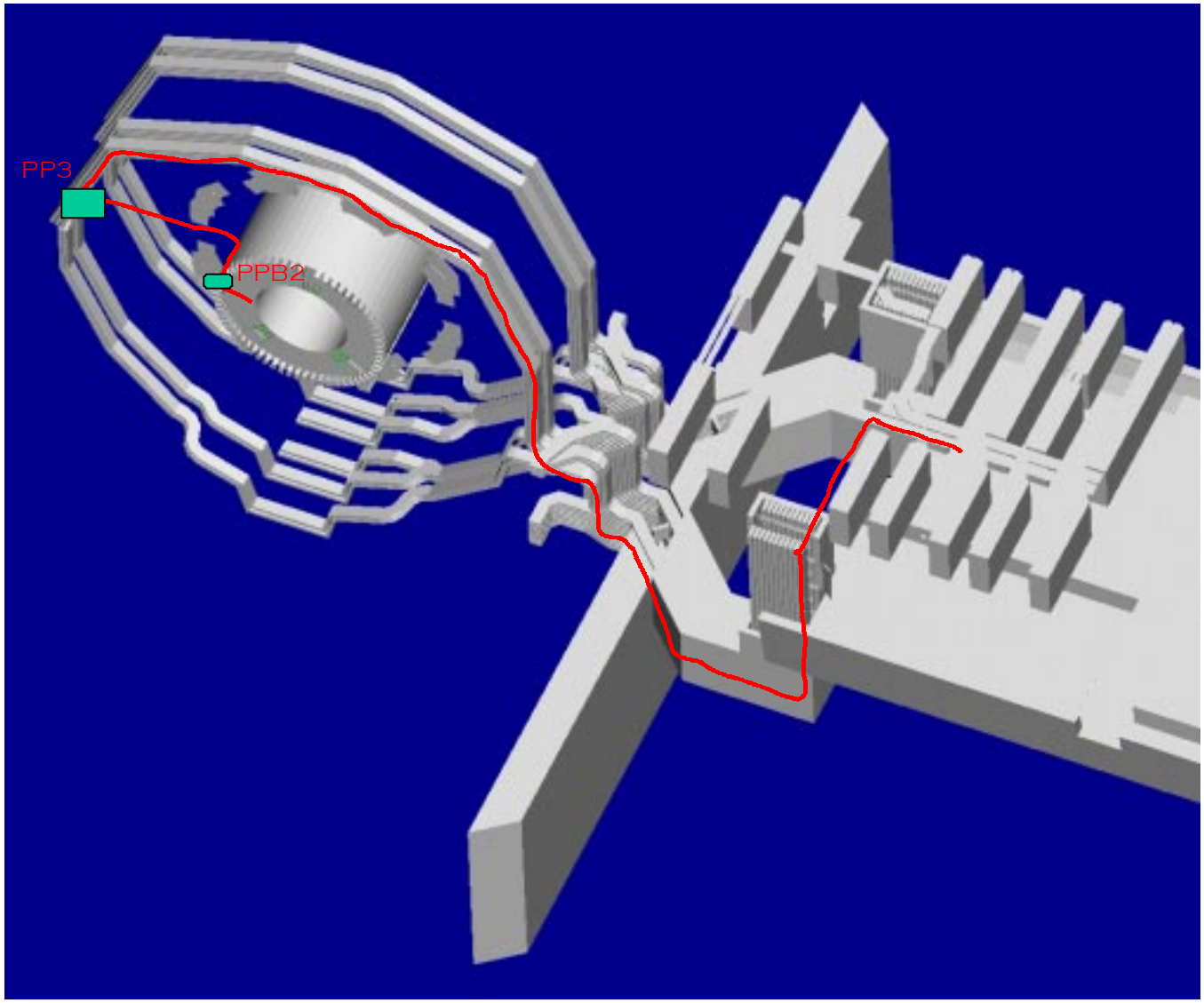

LOW MASS CABLE DEFINITION

TYPE I (7 Module) (ΔV nominal 0.4V/1.5m)

Cable	Circuit Name	Material/ Area for Nom ΔV mm^2	Nearest AWG	Trace Width mm	Conductor Area mm^2	ΔV	quantity	OD or Thickness mm	Width mm	PF = 2 Area mm^2
HV		*Copper Flex*			Cu					
	VDET	-		0.5	0.0125		14	0.10	3.00	8.40
Hi Power		*Aluminum Wire*			Al					
	VDD		26	-	0.1550	0.415	14	1.07	1.07	32.06
	VDDA		26	-	0.1550	0.295	14	1.07	1.07	32.06
	VCC		26	-	0.1550	0.393	14	1.07	1.07	32.06
Low Power		*Copper Flex*			Cu					
	VVDC	-		0.5	0.0125	0.373	14	0.10	1.00	2.80
	VPIN	-		0.5	0.0125	-	14	0.10	1.00	2.80
	ISET0	-		0.5	0.0125	-	14	0.10	1.00	2.80
	ISET1	-		0.5	0.0125	-	14	0.10	1.00	2.80
Flex Foil	*RESET*	-		0.5	0.0125	-	14	0.10	1.00	2.80
0.025	*PT1000 Module*	-		0.5	0.0125	-	14	0.10	1.00	2.80
mm	*PT1000 Cooling*	-		0.5	0.0125	-	0	0.10	1.00	0.00
OPTO		12-way Bundle								
	Fiber bundle			-	-	-	2	0.32	3.06	1.96

TYPE II (7 Module) (ΔV nominal 0.4V/5.4m)

Cable	Circuit Name	Material/ Area for Nom ΔV mm^2	Nearest AWG	Trace Width mm	Conductor Area mm^2	ΔV	quantity	OD or Thickness mm	Width mm	PF = 2 Area mm^2
HV		*Copper Flex*			Cu					
	VDET	-		0.5	0.0125		14	0.10	3.00	8.40
Hi Power		*Aluminum Wire*			Al					
	VDD		20	-	0.6150	0.376	14	1.54	1.54	66.40
	VDDA		20	-	0.6150	0.267	14	1.54	1.54	66.40
	VCC		20	-	0.6150	0.357	14	1.54	1.54	66.40
Low Power		*Copper Flex*			Cu					
	VVDC	-		0.5	0.0125	1.344	14	0.10	1.00	2.80
Flex Foil	*VPIN*	-		0.5	0.0125	-	14	0.10	1.00	2.80
	ISET0	-		0.5	0.0125	-	14	0.10	1.00	2.80
	ISET1	-		0.5	0.0125	-	14	0.10	1.00	2.80
	RESET	-		0.5	0.0125	-	14	0.10	1.00	2.80
0.025	*PT1000 Module*	-		0.5	0.0125	-	14	0.10	1.00	2.80
mm	*PT1000 Cooling*	-		0.5	0.0125	-	0	0.10	1.00	0.00
OPTO		12-way Bundle								
	Fiber bundle			-	-	-	2	0.32	3.06	1.96

CONVENTIONAL CABLES

TYPE III (7 Module) (ΔV nominal 0.25V/20m)

Cable	Circuit Name	Material/ Area for Nom ΔV mm^2	Nearest AWG	Trace Width mm	Conductor Area mm^2	ΔV	quantity	OD or Thickness mm	Width mm	PF = 2 Area mm^2
HV		*Copper Wire*			Cu					
	VDET	-					7	1.00	1.00	14.00
Hi Power		*Copper Wire*			Cu					
	VDD		14	-	1.9300	0.272	14	2.39	2.39	159.94
	VDDA		16	-	1.2300	0.303	14	1.94	1.94	105.38
	VCC		14	-	1.9300	0.258	14	2.39	2.39	159.94
	VVDC		16	-	1.2300	0.051	14	1.94	1.94	105.38
Low Power		*Copper Wire*			Cu					
	VPIN	-	30	-		-	14	0.31	0.31	2.60
	SENSE	-	30	-		-	42	0.31	0.31	7.81
	ISET0	-	30	-		-	14	0.31	0.31	2.60
	ISET1	-	30	-		-	14	0.31	0.31	2.60
	RESET	-	30	-		-	14	0.31	0.31	2.60
	PT1000 Module	-	30	-		-	14	0.31	0.31	2.60
	PT1000 Cooling	-	30	-		-	0	0.31	0.31	0.00
OPTO		12-way Bundle								
	Fiber bundle			-	-	-	2	0.32	3.06	1.96

TYPE IV (7 Module) (ΔV nominal 0.50V/100m)

Cable	Circuit Name	Material/ Area for Nom ΔV mm^2	Nearest AWG	Trace Width mm	Conductor Area mm^2	ΔV	quantity	OD or Thickness mm	Width mm	PF = 2 Area mm^2
HV		*Copper Wire*			Cu					
	VDET	-					7	1.00	1.00	14.00
Hi Power		*Copper Wire*			Cu					
	VDD		10	-	4.7400	0.554	14	3.51	3.51	344.96
	VDDA		12	-	2.9800	0.626	14	2.86	2.86	229.03
	VCC		10	-	4.7400	0.525	14	3.51	3.51	344.96
	VVDC		12	-	2.9800	0.104	14	2.86	2.86	229.03
Low Power		*Copper Wire*			Cu					
	VPIN	-	30	-		-	14	0.31	0.31	2.60
	SENSE	-	30	-		-	42	0.31	0.31	7.81
	ISET0	-	30	-		-	14	0.31	0.31	2.60
	ISET1	-	30	-		-	14	0.31	0.31	2.60
	RESET	-	30	-		-	14	0.31	0.31	2.60
	PT1000 Module	-	30	-		-	14	0.31	0.31	2.60
	PT1000 Cooling	-	30	-		-	0	0.31	0.31	0.00
OPTO		12-way Bundle								
	Fiber bundle			-	-	-	2	0.32	3.06	1.96

US 15 Elevation

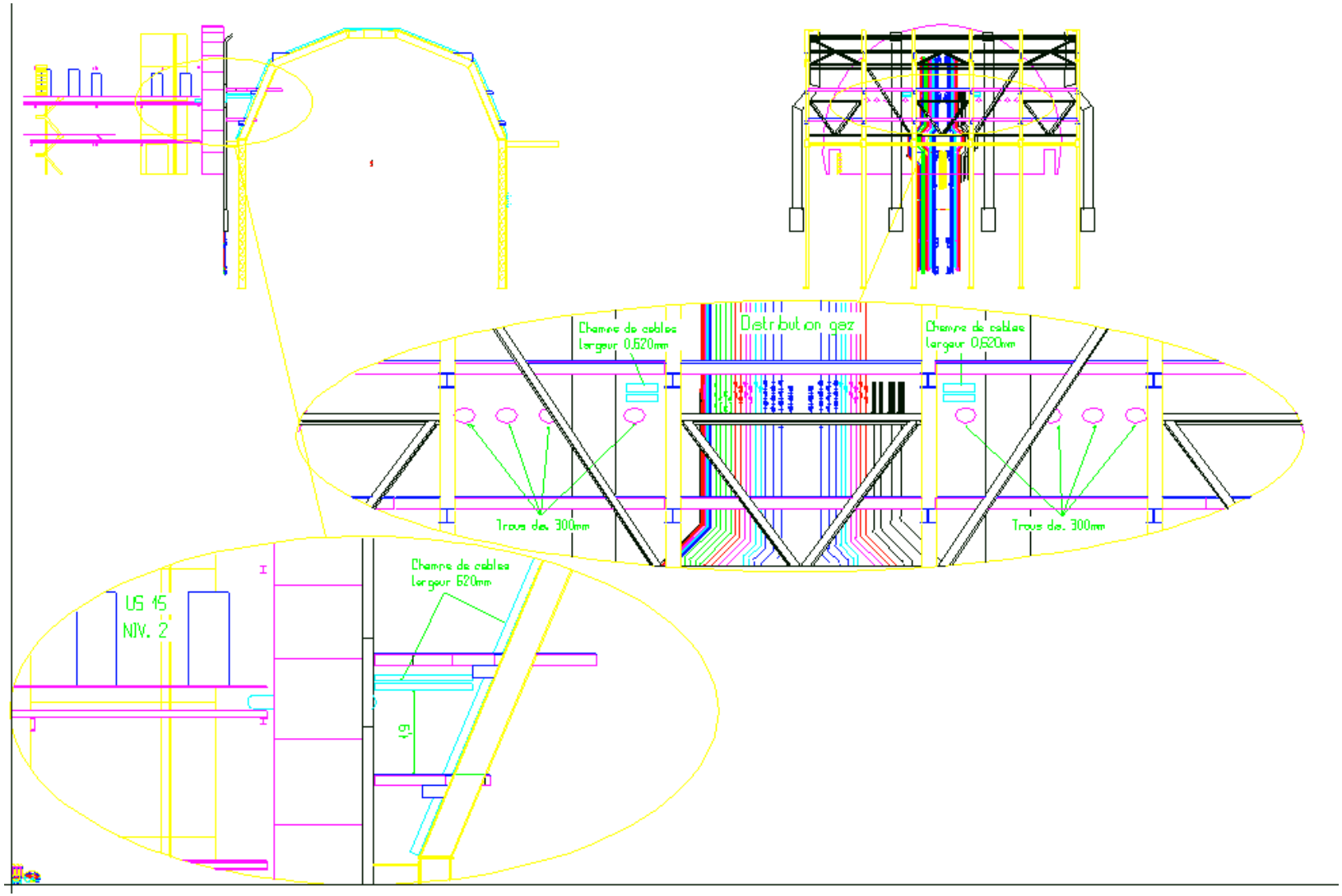

CIRCUIT SENSITIVITY

Circuit	Current (Max)	Current (USED)
Vcc	0.75	0.6
Vddd	1.5	0.75
Vdda	0.6	0.45
PT100	0	0
Optical link	1.00E-05	1.00E-05
VCSEL	1.00E-05	1.00E-05
Bias Voltage	2.00E-03	1.60E-03

SENSITIVITY TO CHANGES IN PARAMETERS

- **CURRENT/POWER**
  - SLIGHT SENSITIVITY FOR SMALL CHANGES
    - <10% (+/-) EQUIVELANT TO 1 CABLE SIZE INCREASE FOR 1 TRACE
- **NUMBER OF CIRCUITS**
  - HAS INCREASED TO ALLOW FOR CONTROL OF OPTO'S
  - SENSE WIRES ONLY PROCEED INTO PPB2
- **NOISE REJECTION**
  - TWISTED PAIR DOUBLES WIRE AREA (FROM NON-TWISTED)
    - 40% INCREASE FROM BEFORE.
- **FIBER MODULARITY**
  - CURRENTLY BUNDLES COME MODULO 12 WHICH DOES NOT EASILY DIVIDE INTO 13 X 3
    - POSSIBLE 30% INCREASE IN FIBER CROSS-SECTION

BUNDLE INDICATIVE OF SERVICE CROSS SECTION (TYPE I, II)

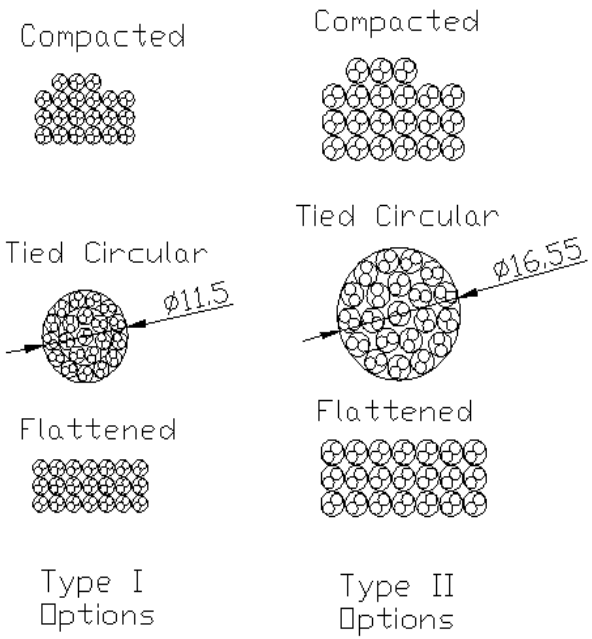

MODULE SERVICES MAY UP TO DOUBLE IN FACE AREA FROM CURRENT BEST ESTIMATES.

FULL SCALE TESTING OF MODULE POWER CHAIN IS NECESSARY TO DETERMINE THE EXTENT TO WHICH THEY MAY INCREASE

Pixel Detector

Services as routed

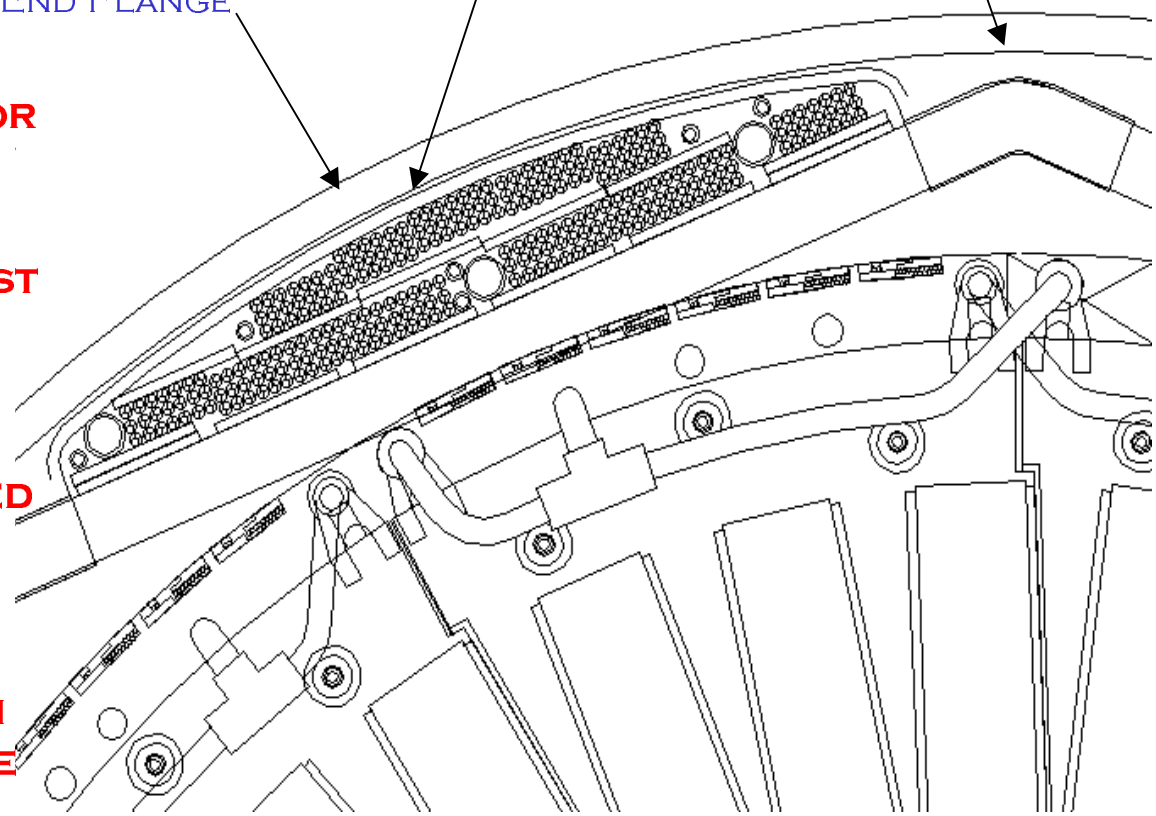

- Service packing laid out for flat panel forward frame
- From CAD models with twisted pair sized for worst case power, we are near limit of space available
- Exit of barrel services from interior of frame need close attention and physical model to assess real space
- Increases in Cross Section from this case is untenable space-wise-would need to go to flex cables from wire

Questions to Answer

- **Immediate (this month)**
  - Number of Circuits (please no more)
  - Are Conductor Sizes adequate
  - Is Philosophy acceptable (as opposed to local regulation)
- **Not so immediate (6 months)**
  - Flat vs. Round
  - Grounding and Shielding of cables
  - Possibility of rad hard voltage regulation at PPB2
- **Beyond Prototype Cables (6 months)**
  - How to proceed on differences with B-Layer
  - Number/type/size of non-module services
    - Grounding
    - Shielding
    - Heaters
    - DCS sensors that aren't related to modules (e.g. services temp)
    - Cooling Sensors
    - ROD stuffs

Cable Prototyping

- **LBNL is prepared to provide all prototypes for Cable**
- **Would like to have available by Sept Test Beam**
- **Flat Flex (5.4m and 1.5m) to follow end of Oct**
- **Propose:**
  - Provide Single Module Cables at first
    - Bring Power (only) in on long cables--leave control signals and Vvdc to iteration with flex cables
    - Test twisted and non-twisted cable performance, possibly in simulated noise environment
  - Rebuild infrastructure to make large Flex (For end of Oct)
    - Make single module realistic cables with power and control signals (including optical link)--Round + Flex Solution & Flex/Flex if desired
    - intended for iteration of module with optolink on board
  - <<Check point>> Decide what cable option set to pursue (Jan '00)
  - Make Full length Cable Bundles for Spring '00
    - Pigtail designs need to proceed along similar lines
    - Need to check integration with Flex-Hybrid phasing/schedule

PIGTAIL PROTOTYPE TESTING

NOT PIGTAIL TO MODULE CONNECTION

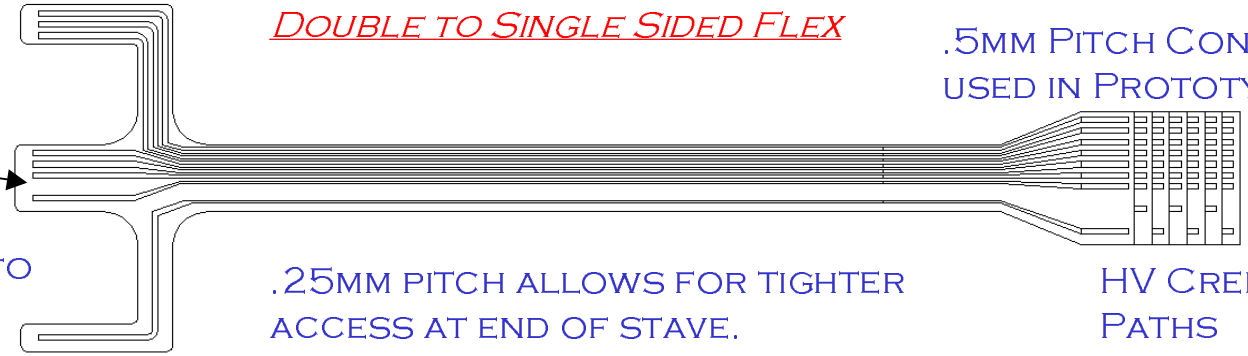

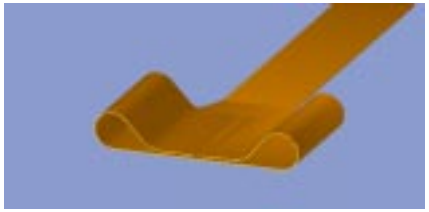

UP TO 90 CONNECTIONS MUST BE MADE AT EACH END OF EVERY STAVE

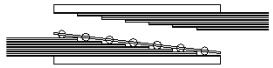

BALL GRID ARRAY CONTACT PAD

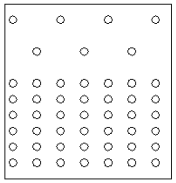

- **TEST ASSEMBLING SOLDER END**
  - OXFORD HAS SUCCESSFULLY SOLDERED 0.5MM PITCH STRAIGHT CABLE--TESTING ARRAY TECHNIQUE
- **MAKING (SMALL) DOUBLE SIDED FLEX TO TEST CACTUS END**
  - MAY TRY SOLDERING THIS AS WELL--SAMPLES EXIST OF NI/AU PLATED AL SOLDERED TO CU.
- **IS SOLDER ACCEPTABLE THIS CLOSE TO DETECTOR?**

Physical Integration of Terminations

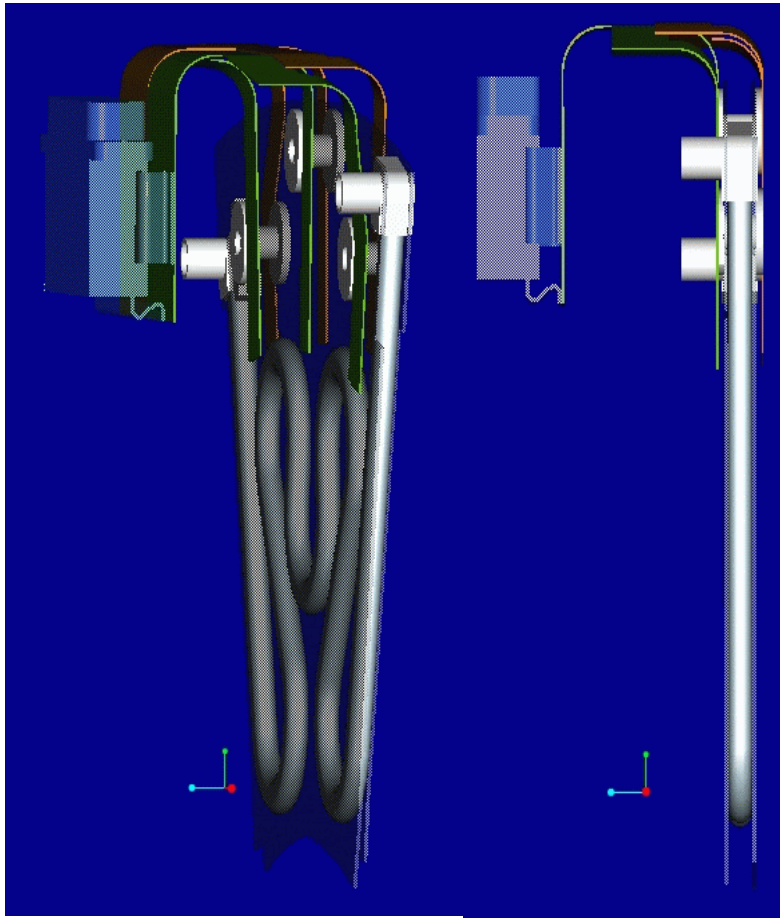

- **Want to minimize part-count per bundle--integrate all pigtails into one multi-layer flex**
- **Reducing Number of Connectors**
  - Reduces Space at Patch Panels
  - Reduces Time for maintenance
  - Matches Structural Modularity
  - Requires alternate way of testing individual Modules
  - Increases expense of pigtail (?)
- **Take advantage of accuracy of Flex-Circuit production as larger integrating structure**
  - Discuss migration of components from hybrid to pigtail?
  - Possible layout advantages in Barrel
  - Opto-electrical Harness (like SCT)?

Module Mechanics

- **Begin to look at the mechanical integration of Services into the module**
  - 3D models of module and assembly tooling to be created
- **Physical aspects of electrical connection**
  - How are *ALL* of the connections made-physical and CAD models
- **FEM of module as a whole**
  - Thermal/Hygroscopic behavior of Flex (Hybrid and Pigtail)
  - Loads induced during assembly of Module
  - Guarantee adequate load transfer for all aspects of assembly to guard against module damage
- **Loads induced *BY* the services on the module**
  - Can use results of behavior of kapton flex materials from module analysis
  - Leads to ability to better assess loads of services on detector as a whole

Design of Pigtails

- **Stave and Sector Pigtails are designed designed collaboratively**
  - would like to share common termination method to module
  - Right and Left Hybrid for Stave-which for Sector?
- **Will make and maintain CAD and FEA models of Modules at LBNL**
  - Ties into module assembly/ placement work also conducted at LBNL in the near term
- **Work on module placement tooling is tied to Pigtail Termination**
  - LBNL will prototype connection of pigtail to module in concert with Bonn
  - End-Effector for module handling will be developed at LBNL and used on both Sector and Stave placement tooling
  - Needs to respect both stave and sector Pigtail design