ATLAS Pixel Prototype Cables

Eric Anderssen
Lawrence Berkeley National Laboratory
One Cyclotron Road, M/S 50B-6208
Berkeley, CA 94720
ECAnderssen@lbl.gov
(510) 495-2821

Cable Plant Overview

- Complex Cable Chain from Module to Rack Cavern
- Cables sized based on local optimizations, e.g. mass, voltage drop for a given region
- LBNL to provide prototypes (complete) and likely produce low mass cables for production

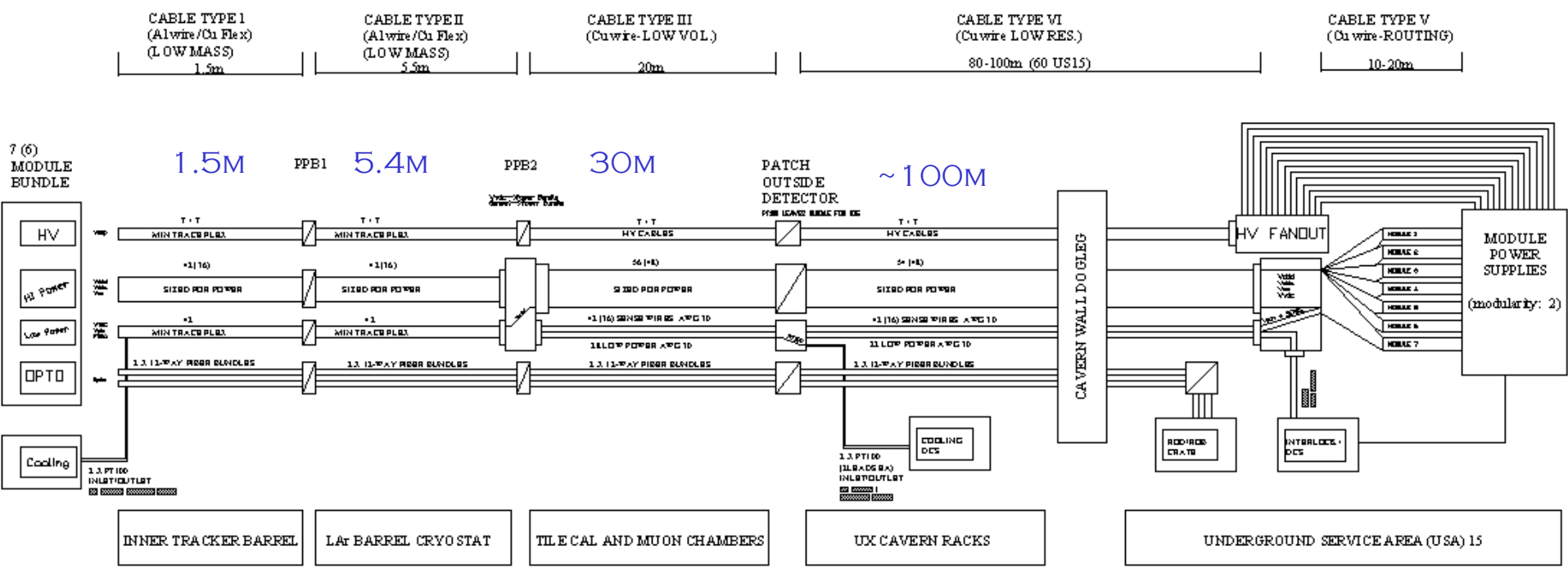

Cable Prototyping

- **LBNL to provide all prototypes for Pixel Cable**
- **Propose:**
  - Provide Single Module Cables at first
    - Bring Power (only) in on long cables--leave control signals and Vvdc to iteration with flex cables
    - Test twisted and non-twisted cable performance, possibly in simulated noise environment
  - Rebuild infrastructure to make large Flex (For end of Oct)
    - Make single module realistic cables with power and control signals (including optical link)--Round + Flex Solution & Flex/Flex if desired
    - intended for iteration of module with optolink on board
  - <<Check point>> Decide what cable option set to pursue (Jan '00)
  - Make Full length Cable Bundles for Spring '00
    - Multiple Module
    - Pigtail designs need to proceed along similar lines
    - Need to check integration with Flex-Hybrid phasing/schedule
    - Represents significant mismatch with proposed ID Mockup

Pixel Detector

Cable Plant Physical Layout

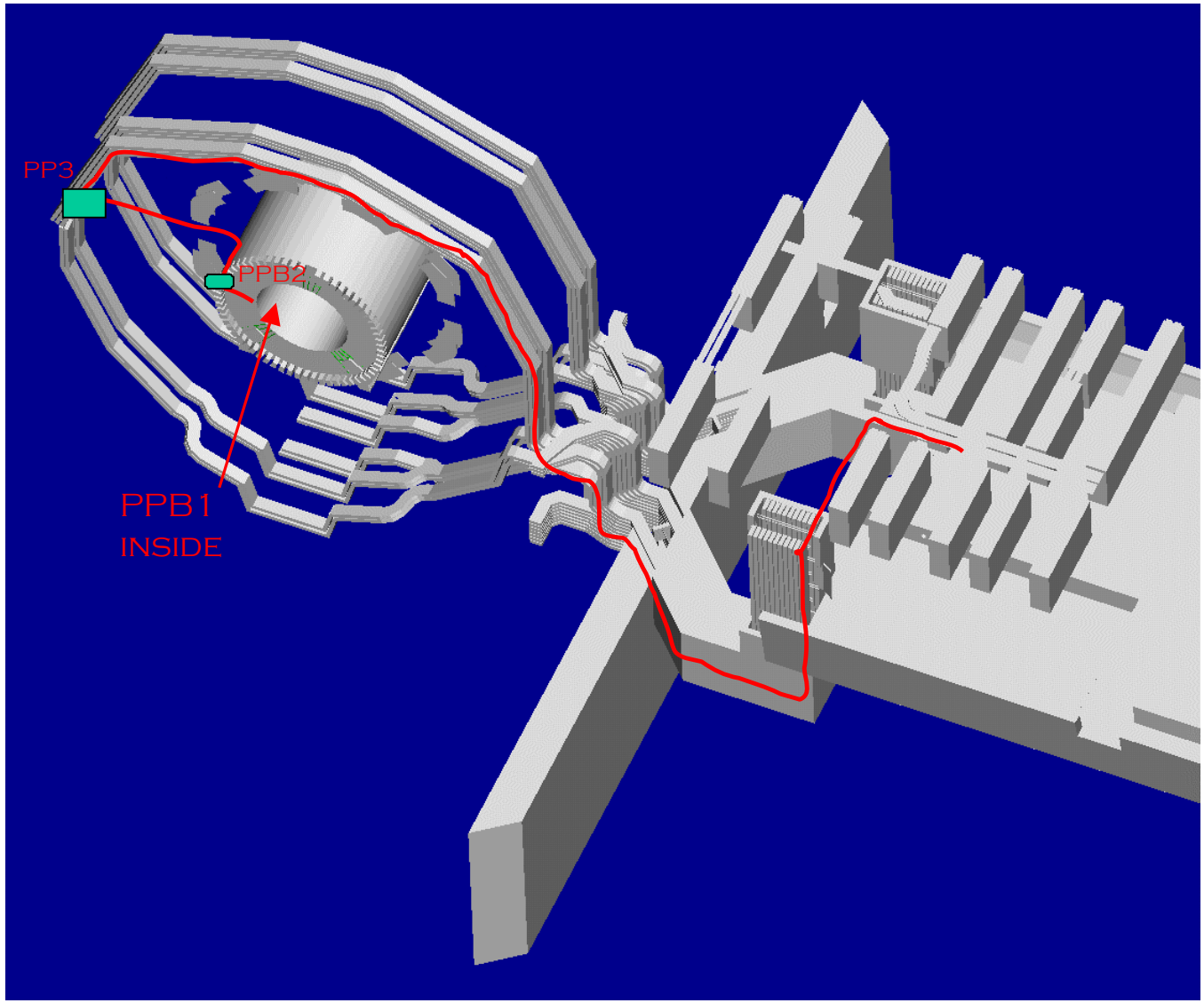

Worst case route is shown-there are 4 PP3's
Located around the circumference

Module/Power supply Parameters

	Voltage		Current		Line Drop		Type I	Type II	Type III	Type IV	Type V	Pigtail
Power Supply	*Max*	*AT FE*	*Supply*	*Expected*	*Allowed*	*Worst Case*	*Actual*	*Actual*	*Actual*	*Actual*	*Nominal*	*Nominal*
VDD	6.000	4	2	1.52	2	2.053	0.267	0.606	0.272	0.554	0.200	0.250
VDDA	6.000	3.5	1.2	1.08	2	2.146	0.446	0.431	0.303	0.626	0.200	0.250
VCCA	4.000	1.75	1.5	1.44	2	2.311	0.595	0.574	0.258	0.525	0.200	0.250
VVDC	-	4	-	0.1	-	2.322	0.373	1.344	0.028	0.058	0.200	0.250
VPIN	-	10	-	0.0005	-	-	-	-	-	-	-	-
ISET0	-	-	-	-	-	-	-	-	-	-	-	-
ISET1	-	-	-	-	-	-	-	-	-	-	-	-
RESET	-	-	-	-	-	-	-	-	-	-	-	-
VDET	-	700	0.004	-	-	-	-	-	-	-	-	-

- **Numbers used to size cables are for worst case at the end of life**
  - Assume this is correct until further notice
  - 700V is high for most connectors and Wire insulation
  - 6V at FE is seen as the safe limit-at the Front End Electronics
  - VDD requires 4V, and has a drop of 2.053V-this is *at* the Power Supply Spec
- **Current quoted above is for Two modules in parallel (power supply)**
  - B-Layer modules may have more dissipation and use different table/cable sizes
- **Cable Performance requirements have not been considered**
  - EMI more work than anticipated
  - Active or Passive Elements at PP2 or PP3 are not ready for primetime
  - Candidate connectors selected, but not finalized
- **Round/Twisted/Untwisted**
  - Will purchase and prototype each
  - Have laid in twisted out to PP3 (most space)

CABLE DEFINITIONS 7 MODULE BUNDLES

		Voltage		Current		Line Drop		Type I	Type II	Type III	Type IV	Type V	Pigtail
original	**Power Supply**	*Supply*	*AT FE*	*Supply*	*Expected*	*Allowed*	*Worst Case*	*Actual*	*Actual*	*Actual*	*Actual*	*Nominal*	*Nominal*
1.5	*VDD*	6.000	4	2	1.52	2	2.053	0.267	0.606	0.176	0.554	0.200	0.250
0.9	*VDDA*	6.000	3.5	1.2	1.08	2	2.146	0.446	0.431	0.193	0.626	0.200	0.250
1.2	*VCCA*	4.000	1.75	1.5	1.44	2	2.311	0.595	0.574	0.167	0.525	0.200	0.250
0.2	*VVDC*	-	4	-	0.18	-	2.322	0.373	1.344	0.051	0.104	0.200	0.250
	VPIN	-	10	-	0.0005	-	-	-	-	-	-	-	-
	ISET0	-	-	-	-	-	-	-	-	-	-	-	-
	ISET1	-	-	-	-	-	-	-	-	-	-	-	-
	RESET	-		-	-	-	-	-	-	-	-	-	-
	VDET	-	700	0.004	-	-	-	-	-	-	-	-	-

Power Supply Current figures are for two modules in parallel. Line drops are two way, supply/return

0.352558
0.232071
0.250502
0.835132

TYPE I (7 Module) (ΔV nominal 0.4V/1.5m)

Cable	Circuit Name	Material/ Area for Nom ΔV mm^2	Nearest AWG	Trace Width mm	Conductor Area mm^2	ΔV	quantity	OD or Thickness mm	Width mm	PF = 2 Area mm^2	TYPE 1 Bundle Summary Packing Factor 2				Insulated Wire Diameter	AWG
HV		*Copper Flex*			Cu						Width	Thickness	**Area**		4.99	8
	VDET	-		0.5	0.0125		14	0.10	3.00	8.40	21	0.4	**8.4**		3.51	10
Hi Power		*Aluminum Wire*			Al									original	2.86	12
	VDD		24 solid	-	0.2410	0.267	14	1.07	1.07	32.06				26	2.39	14
	VDDA		27solid	-	0.1024	0.446	14	1.07	1.07	32.06	42 Cables, likely twisted pair.			26	1.94	16
	VCC		27solid	-	0.1024	0.595	14	1.07	1.07	32.06		**Area:**	**192.34**	26	1.79	18
Low Power		*Copper Flex*			Cu										1.54	20
	VVDC	-		0.5	0.0125	0.373	14	0.10	1.00	2.80					1.33	22
	VPIN	-		0.5	0.0125	-	14	0.10	1.00	2.80					1.19	24
	ISET0	-		0.5	0.0125	-	14	0.10	1.00	2.80					1.065	26
	ISET1	-		0.5	0.0125	-	14	0.10	1.00	2.80						28
Flex Foil	*RESET*	-		0.5	0.0125	-	14	0.10	1.00	2.80						30
0.025	*PT1000 Module*	-		0.5	0.0125	-	14	0.10	1.00	2.80	Width	Thickness	**Area**			
mm	*PT1000 Cooling*	-		0.5	0.0125	-	0	0.10	1.00	0.00	21	0.4	**8.40**			26solid
OPTO		12-way Bundle									Width	Thickness	**Area**			27solid
	Fiber bundle			-	-	-	2	0.32	3.06	1.96	3.06	0.64	**1.96**			

TYPE II (7 Module) (ΔV nominal 0.4V/5.4m)

Cable	Circuit Name	Material/ Area for Nom ΔV mm^2	Nearest AWG	Trace Width mm	Conductor Area mm^2	ΔV	quantity	OD or Thickness mm	Width mm	PF = 2 Area mm^2	TYPE 1 Bundle Summary Packing Factor 2				
HV		*Copper Flex*			Cu						Width	Thickness	**Area**		
	VDET	-		0.5	0.0125		14	0.10	3.00	8.40	21	0.4	**8.40**		
Hi Power		*Aluminum Wire*			Al									original	
	VDD		22	-	0.3820	0.606	14	1.54	1.54	66.40	42 Cables, 7pairs each twisted			20	
	VDDA		22	-	0.3820	0.431	14	1.54	1.54	66.40	pair.			24	
	VCC		22	-	0.3820	0.574	14	1.54	1.54	66.40		**Area:**	**398.43**	22	
Low Power		*Copper Flex*			Cu										
	VVDC	-		0.5	0.0125	1.344	14	0.10	1.00	2.80					
Flex Foil	*VPIN*	-		0.5	0.0125	-	14	0.10	1.00	2.80					
	ISET0	-		0.5	0.0125	-	14	0.10	1.00	2.80					
	ISET1	-		0.5	0.0125	-	14	0.10	1.00	2.80					
	RESET	-		0.5	0.0125	-	14	0.10	1.00	2.80					
0.025	*PT1000 Module*	-		0.5	0.0125	-	14	0.10	1.00	2.80	Width	Thickness	**Area**		
mm	*PT1000 Cooling*	-		0.5	0.0125	-	0	0.10	1.00	0.00	21	0.4	**8.40**		
OPTO		12-way Bundle									Width	Thickness	**Area**		
	Fiber bundle			-	-	-	2	0.32	3.06	1.96	3.06	0.64	**1.96**		

6 MODULE BUNDLES HAVE 12 INSTEAD OF 14 CONDUCTORS

Cable Definition 7 Module Bundle

TYPE III (7 Module) (ΔV nominal 0.25V/20m)

Cable	Circuit Name	Material/ Area for Nom ΔV mm^2	Nearest AWG	Trace Width mm	Conductor Area mm^2	ΔV	quantity	OD or Thickness mm	Width mm	PF = 2 Area mm^2	TYPE 1 Bundle Summary Packing Factor 2			
HV		*Copper Wire*			Cu						Width	Thickness	**Area**	
	VDET	-					7	1.00	1.00	14.00	7	2	**14**	
Hi Power		*Copper Wire*			Cu									original
	VDD		12	-	2.9800	0.176	14	2.39	2.39	159.94	56 Cables, 28 pairs twisted			14
	VDDA		14	-	1.9300	0.193	14	1.94	1.94	105.38	pair?			16
	VCC		12	-	2.9800	0.167	14	2.39	2.39	159.94				16
	VVDC		16	-	1.2300	0.051	14	1.94	1.94	105.38		**Area:**	**530.64**	16
Low Power		*Copper Wire*			Cu									
	VPIN	-	30	-		-	14	0.31	0.31	2.60				
	SENSE	-	30	-		-	42	0.31	0.31	7.81	70 Cables likely twisted pair			
	ISET0	-	30	-		-	14	0.31	0.31	2.60				
	ISET1	-	30	-		-	14	0.31	0.31	2.60				
	RESET	-	30	-		-	14	0.31	0.31	2.60				
	PT1000 Module	-	30	-		-	14	0.31	0.31	2.60			**Area**	
	PT1000 Cooling	-	30	-		-	0	0.31	0.31	0.00			**41.68**	
OPTO		12-way Bundle									Width	Thickness	**Area**	
	Fiber bundle			-	-	-	2	0.32	3.06	1.96	3.06	0.64	**1.96**	

TYPE IV (7 Module) (ΔV nominal 0.50V/100m)

Cable	Circuit Name	Material/ Area for Nom ΔV mm^2	Nearest AWG	Trace Width mm	Conductor Area mm^2	ΔV	quantity	OD or Thickness mm	Width mm	PF = 2 Area mm^2	TYPE 1 Bundle Summary Packing Factor 2			
HV		*Copper Wire*			Cu						Width	Thickness	**Area**	
	VDET	-					7	1.00	1.00	14.00	7	2	**14**	
Hi Power		*Copper Wire*			Cu									original
	VDD		10	-	4.7400	0.554	14	3.51	3.51	344.96	54 Cables, 14 pairs each twisted			10
	VDDA		12	-	2.9800	0.626	14	2.86	2.86	229.03	pair?			12
	VCC		10	-	4.7400	0.525	14	3.51	3.51	344.96				10
	VVDC		12	-	2.9800	0.104	14	2.86	2.86	229.03		**Area:**	**1147.98**	12
Low Power		*Copper Wire*			Cu									
	VPIN	-	30	-		-	14	0.31	0.31	2.60				
	SENSE	-	30	-		-	42	0.31	0.31	7.81	70 Cables twisted pair			
	ISET0	-	30	-		-	14	0.31	0.31	2.60				
	ISET1	-	30	-		-	14	0.31	0.31	2.60				
	RESET	-	30	-		-	14	0.31	0.31	2.60				
	PT1000 Module	-	30	-		-	14	0.31	0.31	2.60			**Area**	
	PT1000 Cooling	-	30	-		-	0	0.31	0.31	0.00			**41.68**	
OPTO		12-way Bundle									Width	Thickness	**Area**	
	Fiber bundle			-	-	-	2	0.32	3.06	1.96	3.06	0.64	**1.96**	

6 module bundle has 12 instead of 14 conductors

Pixel Detector

B-Layer Services are Different

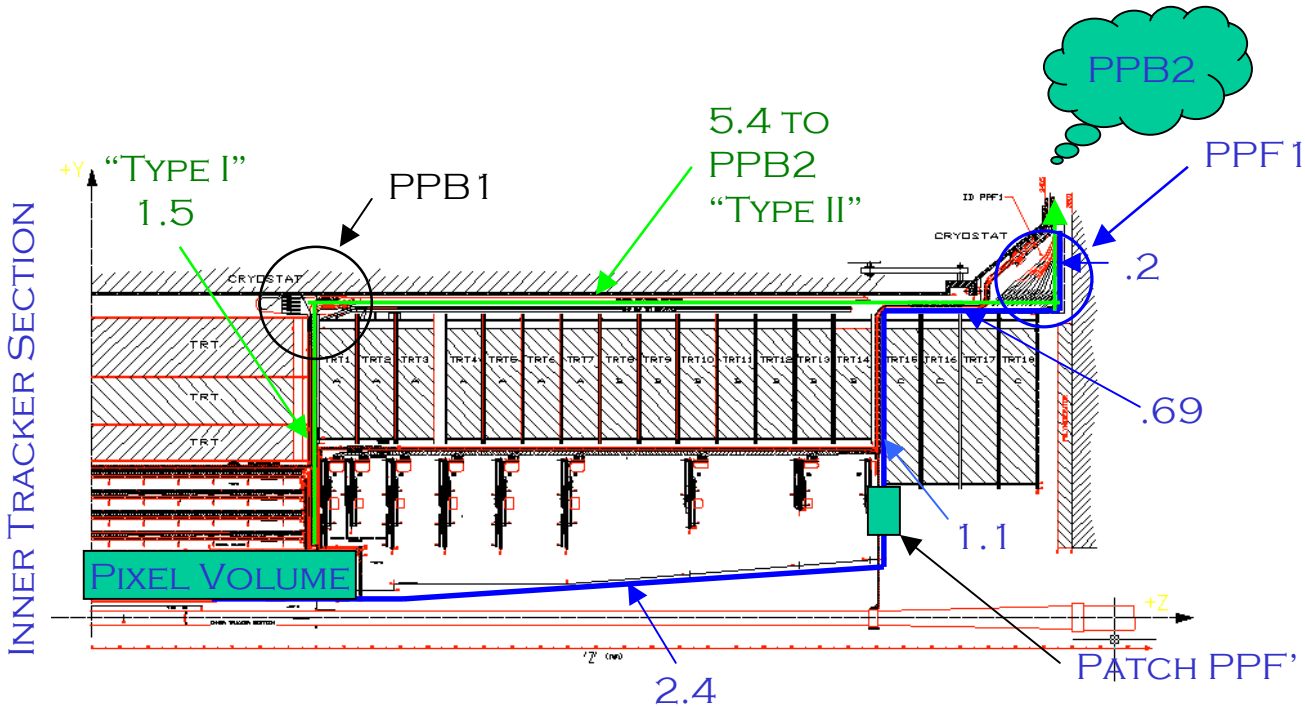

B-Layer routing is shown in Blue, the rest of the Pixel services are routed along the green path.

- Power cables change size at PPB1 and PPF1 from "Type 1" to "Type 2"
- Type 1 is sized for the 1.5m run from inside Pixel Volume to PPB1 through "GAP"
- For B-Layer, this leads to an excessive voltage drop if transition must occur at PPF1
  - Type I is only sized for 1.5m length
- Nominal Drop in type 1& 2 is 0.4V-Type 2 is usually 5.4m long, but for B-Layer is 2.7(+)
  - Propose to Increase Type II cross section slightly and either:
    - Increase Wire sizes to make Type IB @ 0.6V for 3m length (slightly more massive)
    - make a type I cable with length 2.25m (150% length of type 1 cable) to make voltage drop of 0.6V (Introduces auxiliary transition in addition to Patch Panel)

Pixel Detector

Service Integration

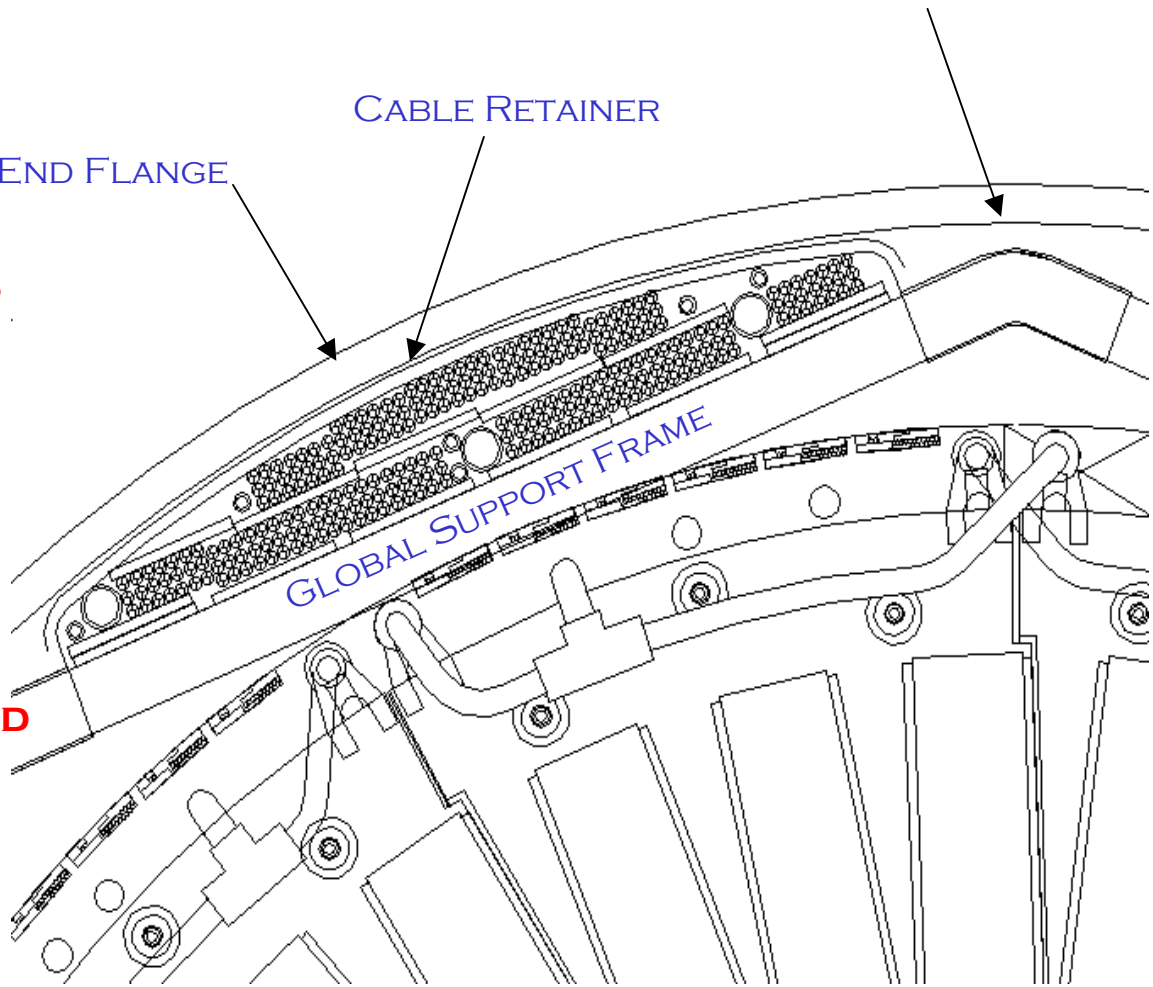

- Cross Section of Low mass cables affect Global Support Frame (LBNL Deliverable
- LBNL Responsible for Integration of Services with All of ATLAS
- Exit of barrel services from interior of frame need close attention and physical model to assess real space
- Service integration with End-Plate stiffener, also important

6 meter Exposure table

- 6 meters full aperture
- 30cm width
- Situated in flex circuit processing lab allowing for exposure, development, etch, QA and touchup in same building
- Running behind ~4wks due to late start
- Still within budget

Table will be complete prior to end of September, when Tech must shift effort to BaBar. At this time Circuit fab shop will qualify the machine production parameters

Pigtail is needed to terminate Bundle to modules

There are 7 layers in this Flex-Circuit

Not pigtail to module connection

Double to Single Sided Flex

.5mm Pitch Contact used in Prototype

Double sided cable Attaches here

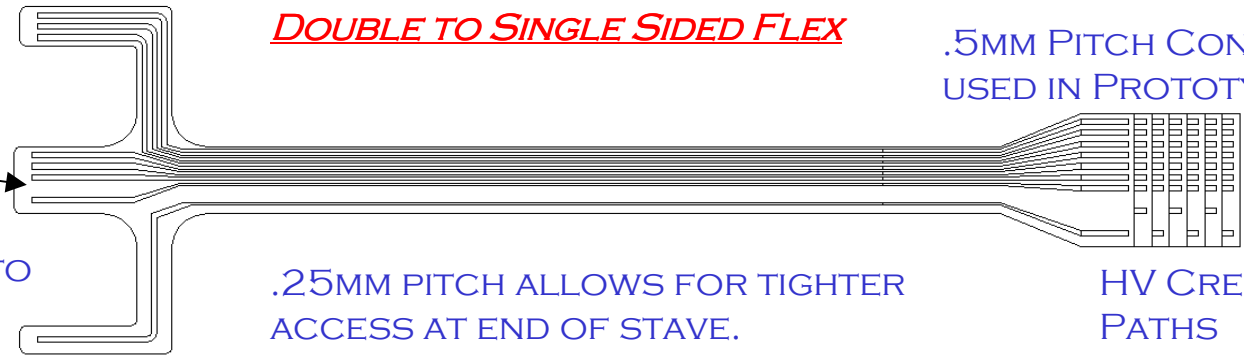

Arms fold over to pick up top

.25mm pitch allows for tighter access at end of stave.

HV Creep Paths

HV

Up to 90 connections must be made at each end of every stave

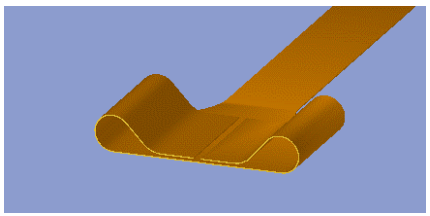

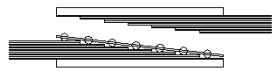

Ball Grid Array Contact Pad

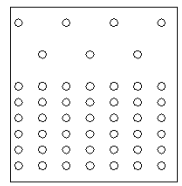

- **Test Assembling Solder End**
  - oxford has successfully soldered 0.5mm pitch straight cable
  - testing array technique at LBNL
- **More interested in Multi-Layer array connection**
- **Have similar concept for terminating to module flex**
  - prototype artwork

Pixel Detector

Some prototypes already built

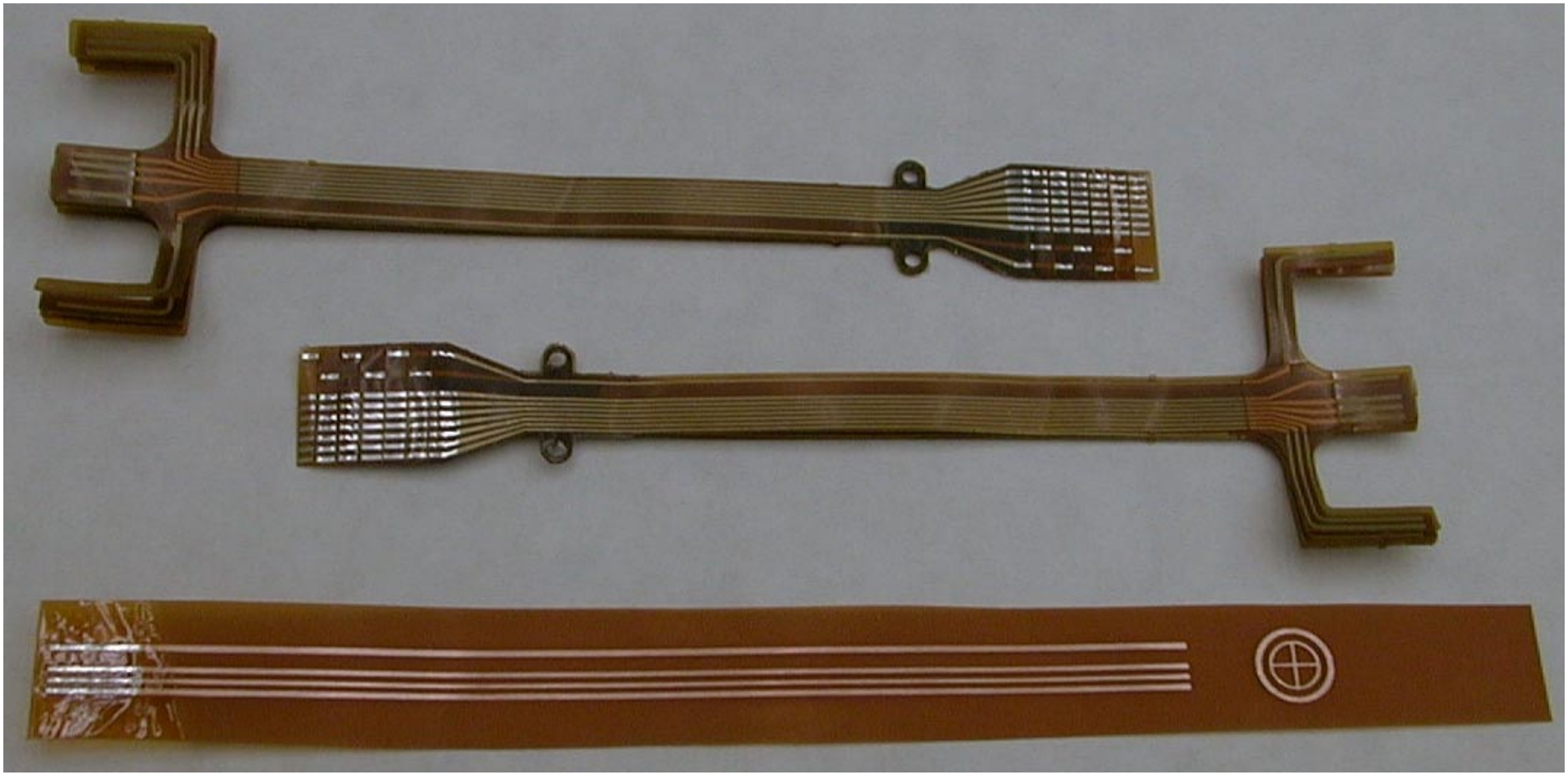

Pixel Detector

Finished Connection

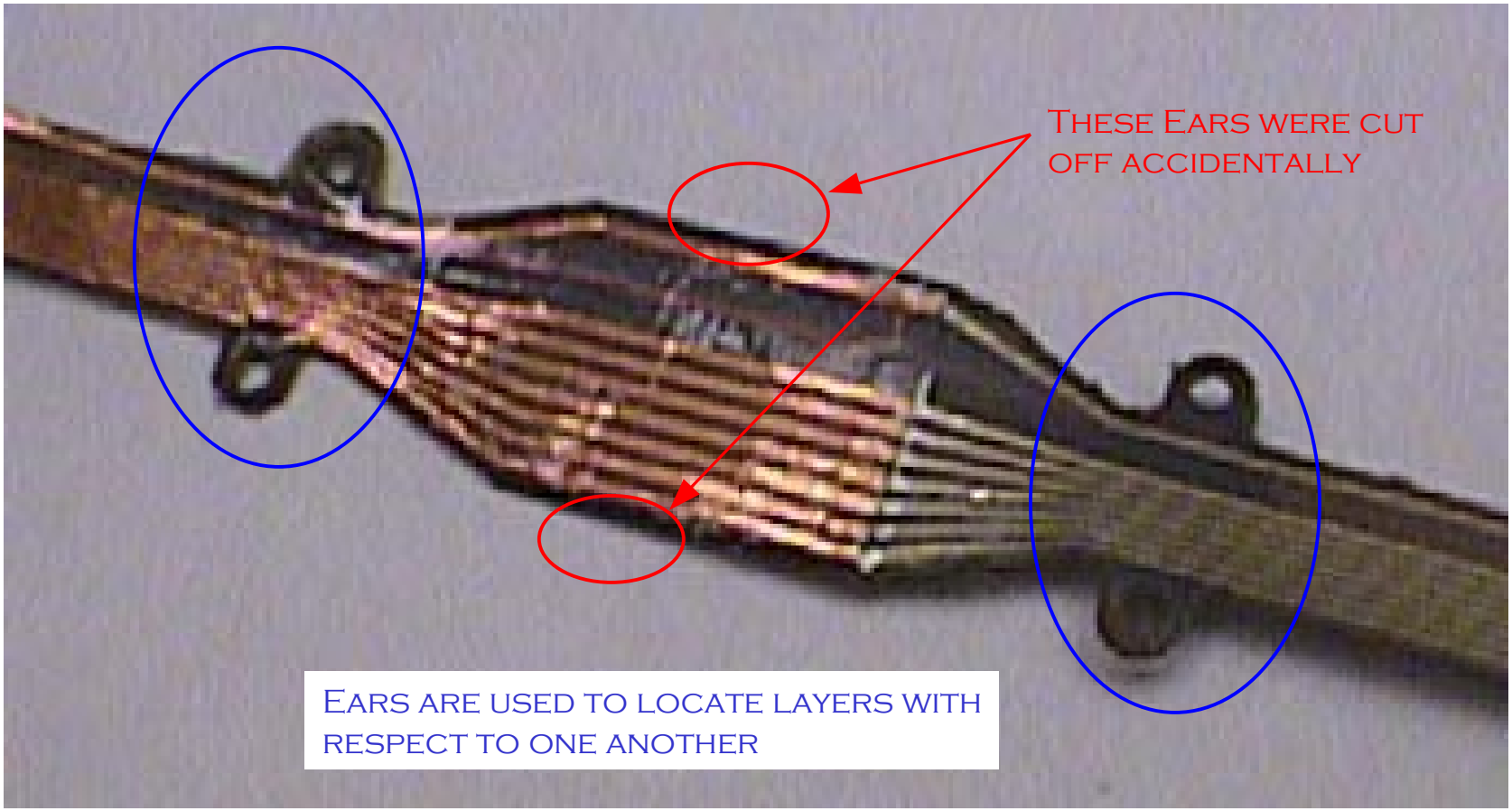

- **Blind Alignment was difficult due to a manufacturing error**
  - Part alignment was better than 25micron using these ears
  - Mating tolerance should be similar

Design of Disk Pigtails

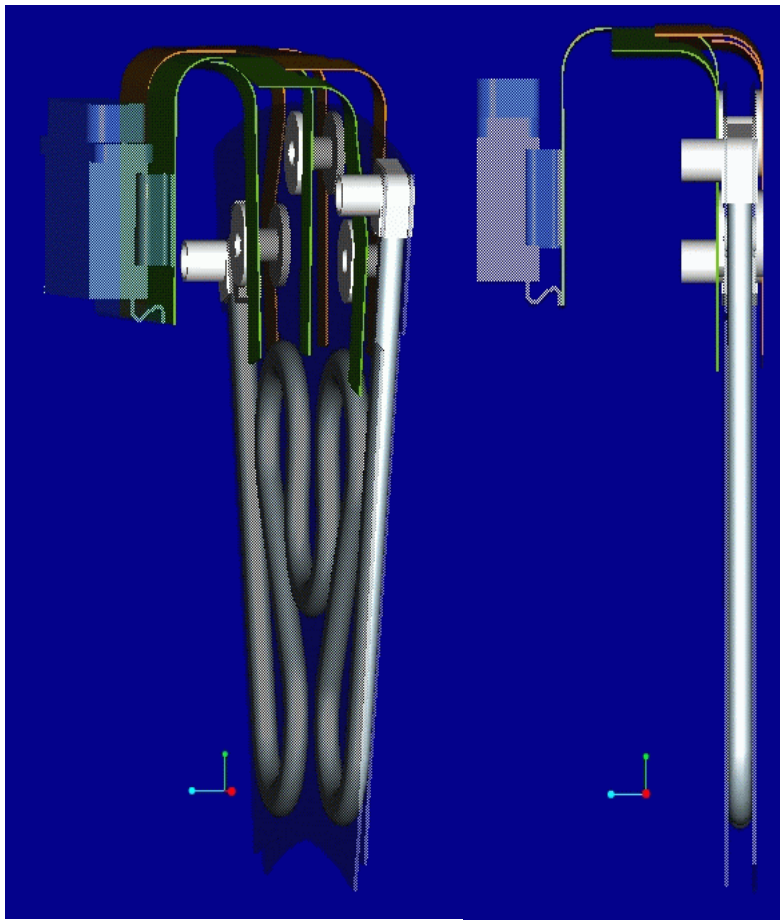

- **LBNL Responsible for design/fabrication of Sector Pigtails**
- **Want to minimize part-count per bundle--integrate all pigtails into one multi-layer flex**
  - Reduces Space at Patch Panels
  - Reduces Time for maintenance
  - Matches Structural Modularity
  - Requires alternate way of testing individual Modules
  - Increases expense of pigtail (?)
- **Take advantage of accuracy of Flex-Circuit production as larger integrating structure**
  - Integrate Optopackages and EMI decoupling components into Pigtail

Questions to Answer

- **Immediate**
  - Personnel/Schedule
  - Feasibility-need to do detail design
  - Costing-Need to get industry on board
- **Not so immediate (6 months)-(design issues)**
  - Flat vs. Round-Awaits Prototyping
  - Grounding and Shielding of cables-Mono-Ground?
  - Voltage budget vs Cost/Space
  - Possibility of rad hard voltage regulation at PPB2-Proposal by CAEN
- **Beyond Prototype Cables (+6 months)**
  - Patch Panel Design (inclusion of passive components)
    - circuit board layout required
  - Number/type/size of non-module services-Generate Service Inventory
    - Grounding
    - Shielding
    - Heaters
    - DCS sensors that aren't related to modules (e.g. services temp)
    - Cooling Sensors
    - ROD stuffs