Figure 9.1

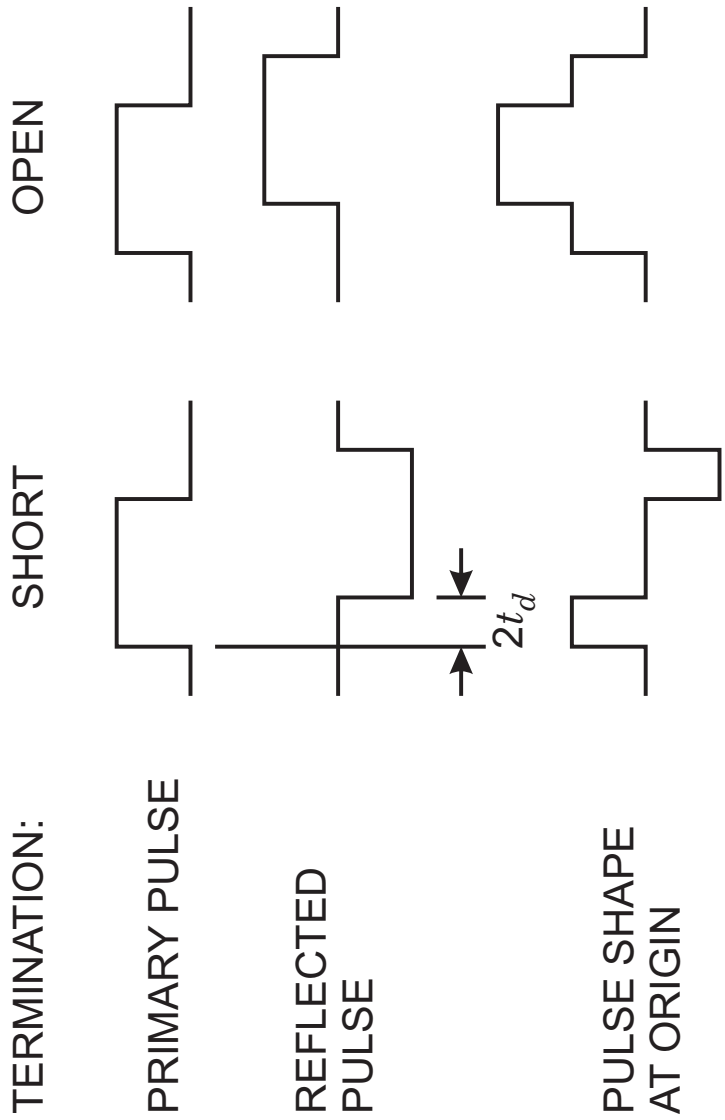

Fig. 9.1.

Figure 9.2

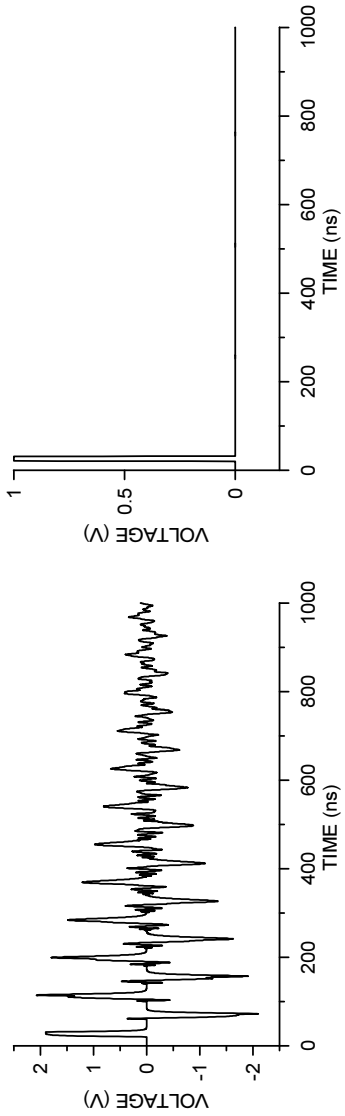

Fig. 9.2.

Figure 9.3

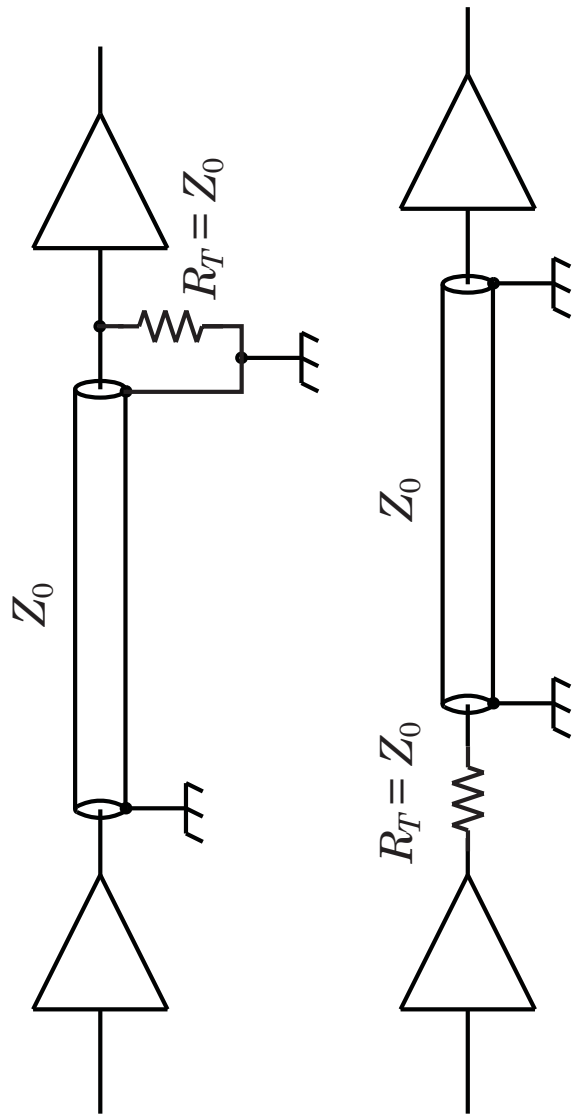

Fig. 9.3.

Figure 9.4

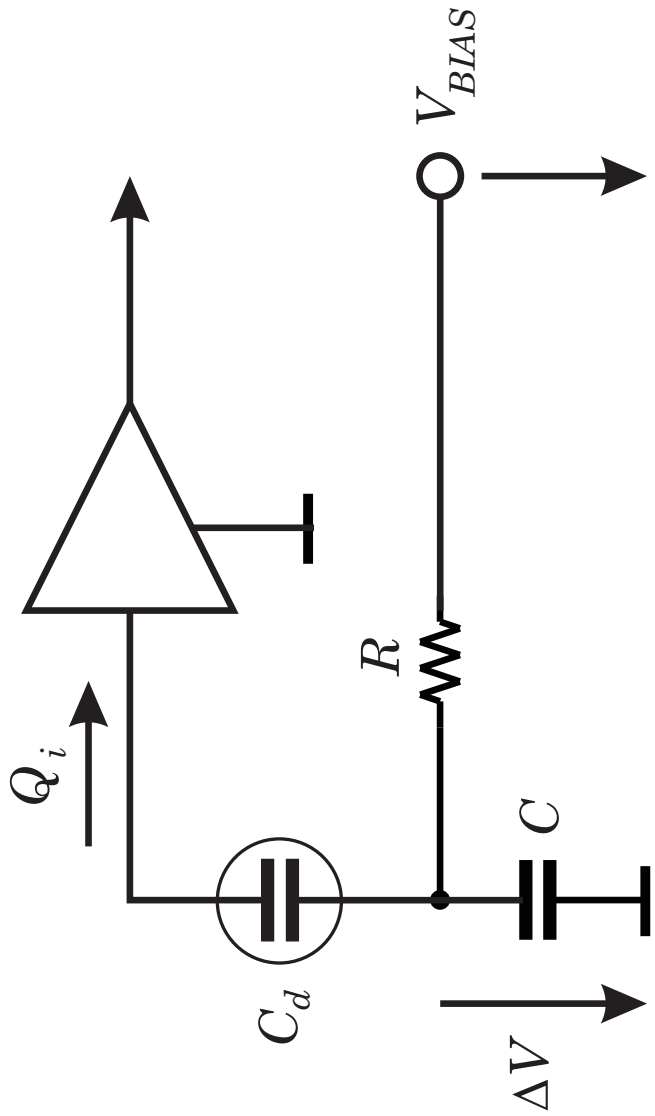

Fig. 9.4.

Figure 9.5

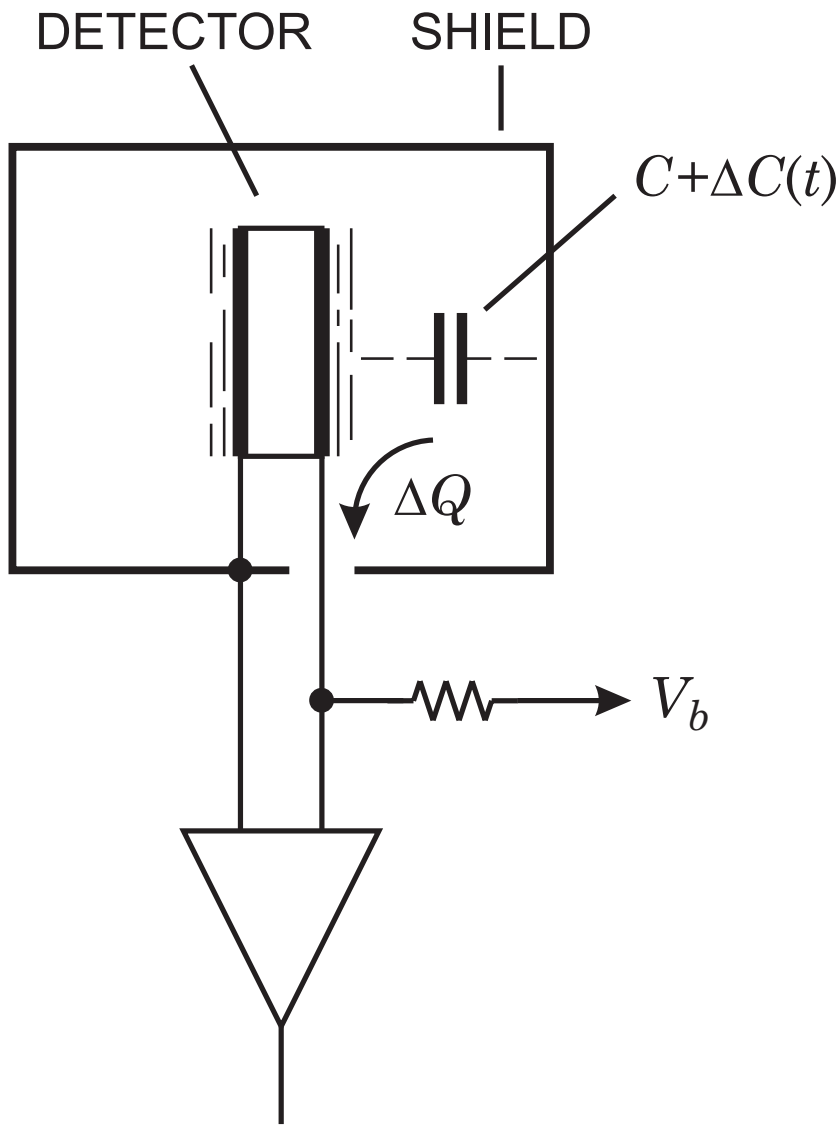

Fig. 9.5.

Figure 9.6

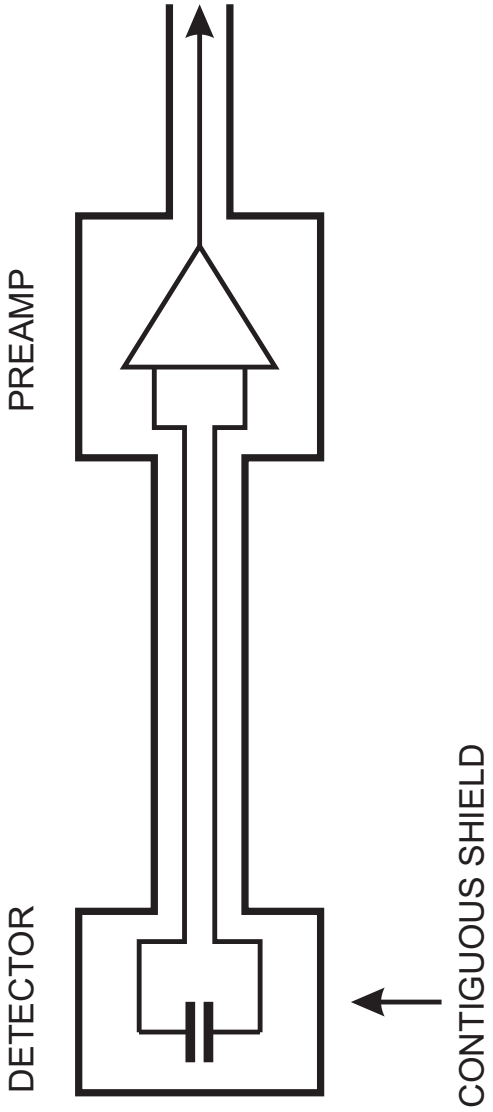

Fig. 9.6.

Figure 9.7

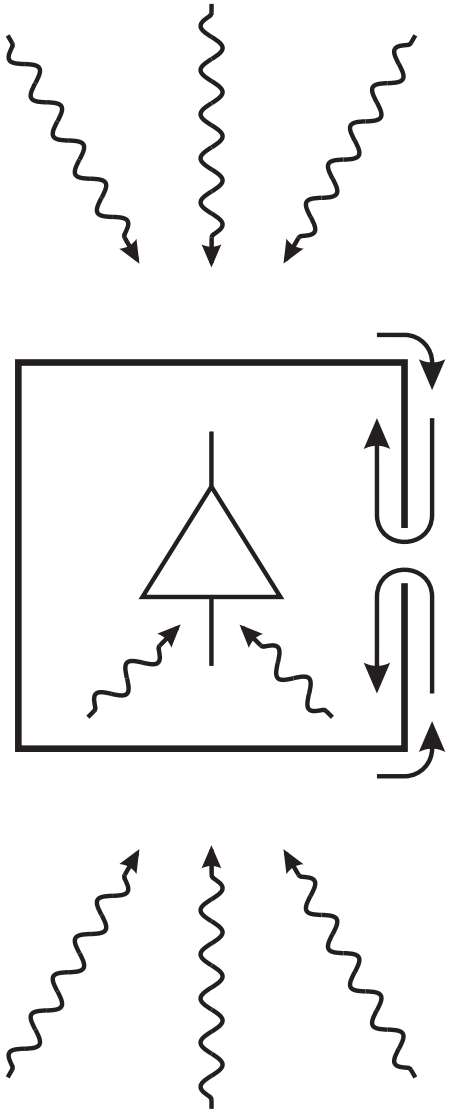

Fig. 9.7.

Figure 9.8

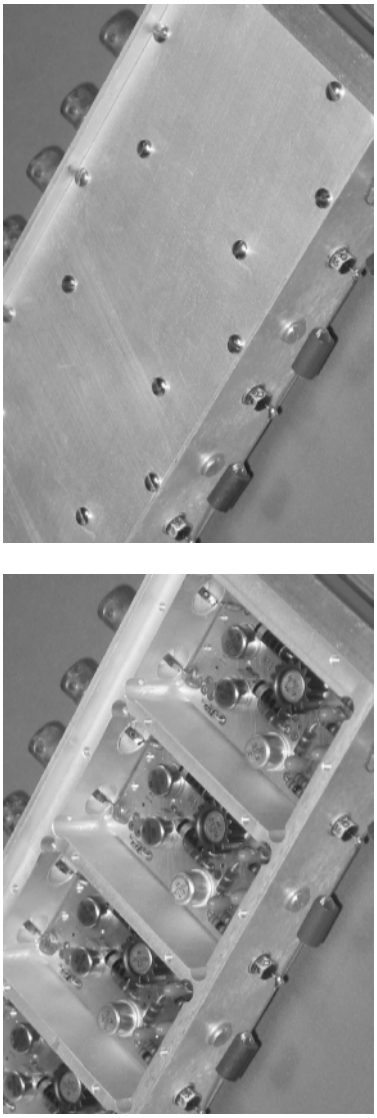

Fig. 9.8.

Figure 9.9

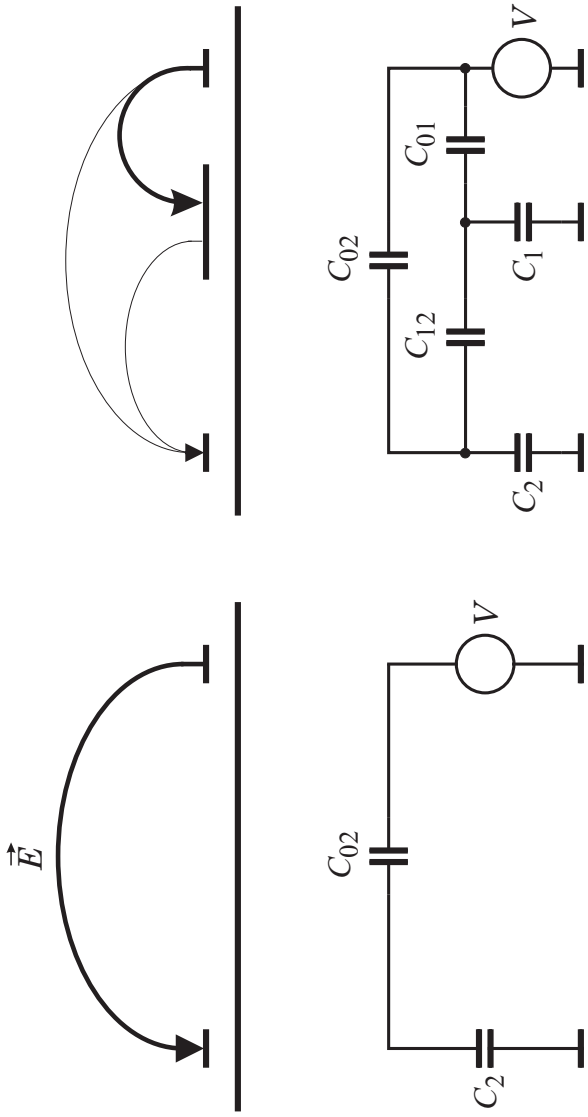

Fig. 9.9.

Figure 9.10

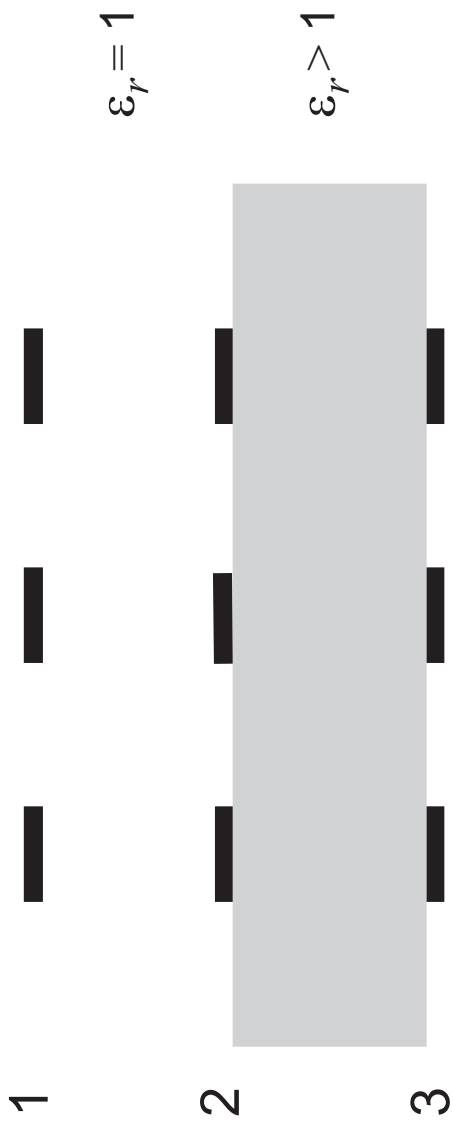

Fig. 9.10.

Figure 9.11

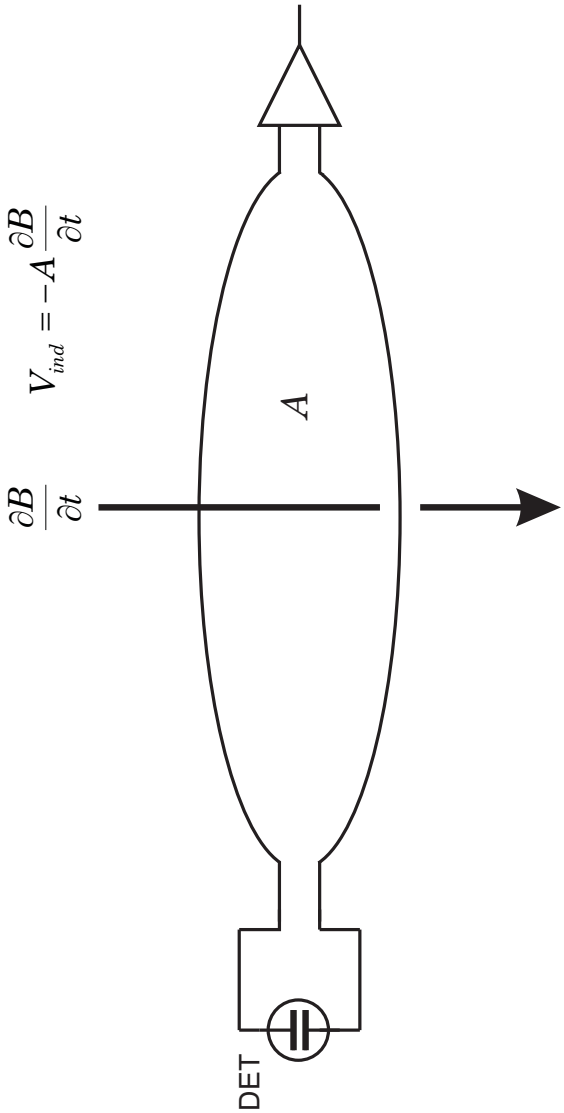

Fig. 9.11.

Figure 9.12

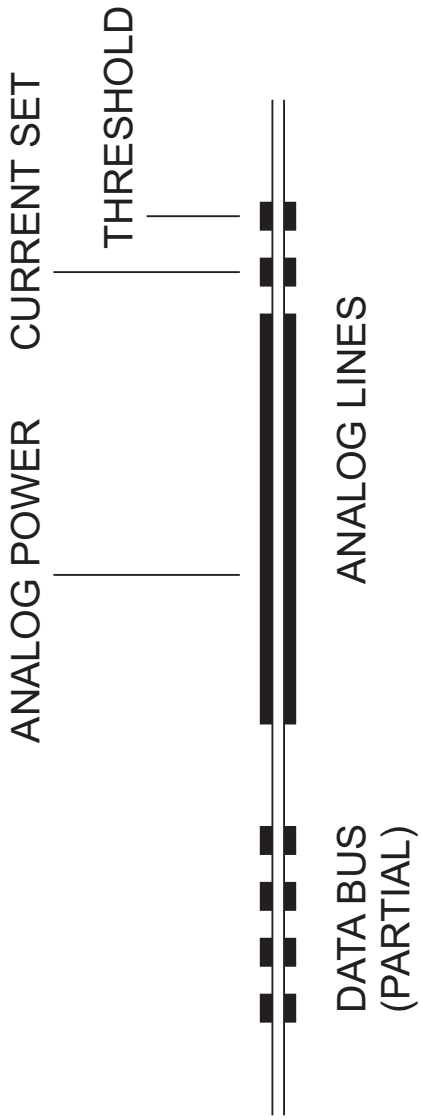

Fig. 9.12.

Figure 9.13

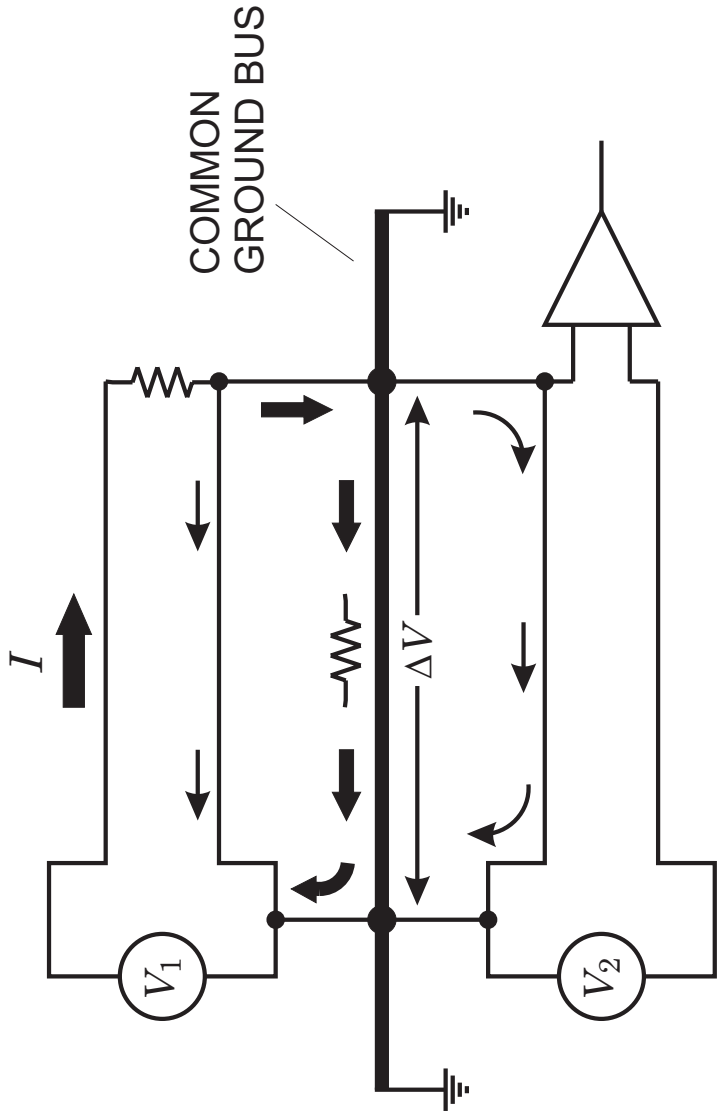

Fig. 9.13.

Figure 9.14

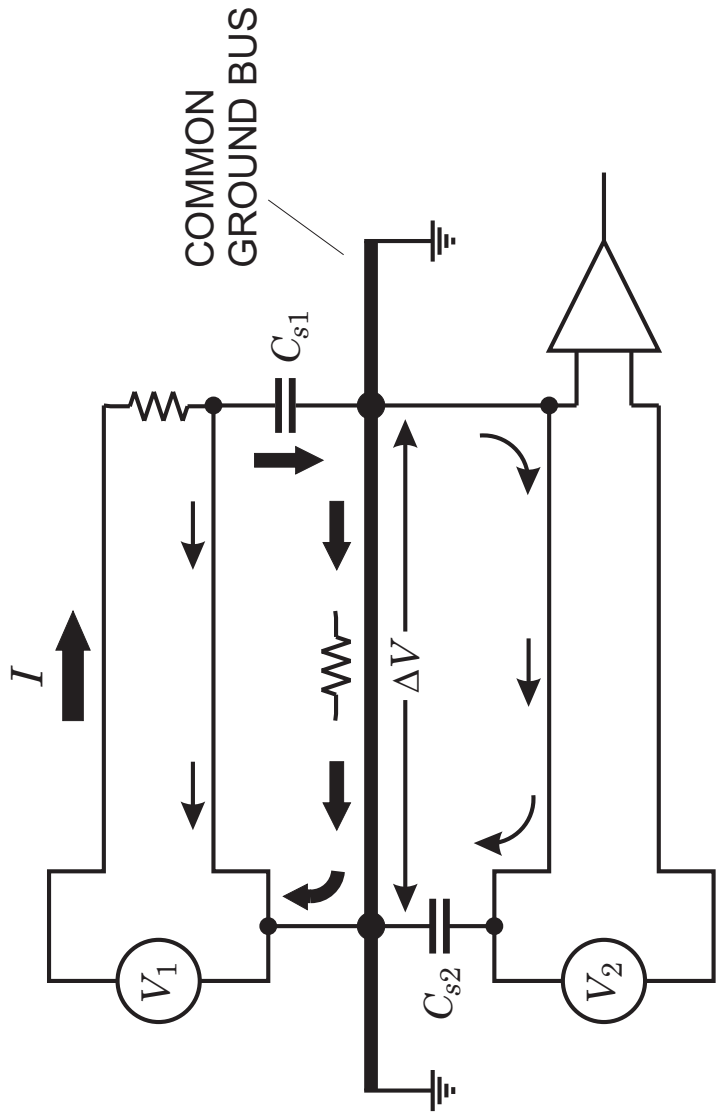

Fig. 9.14.

Figure 9.15

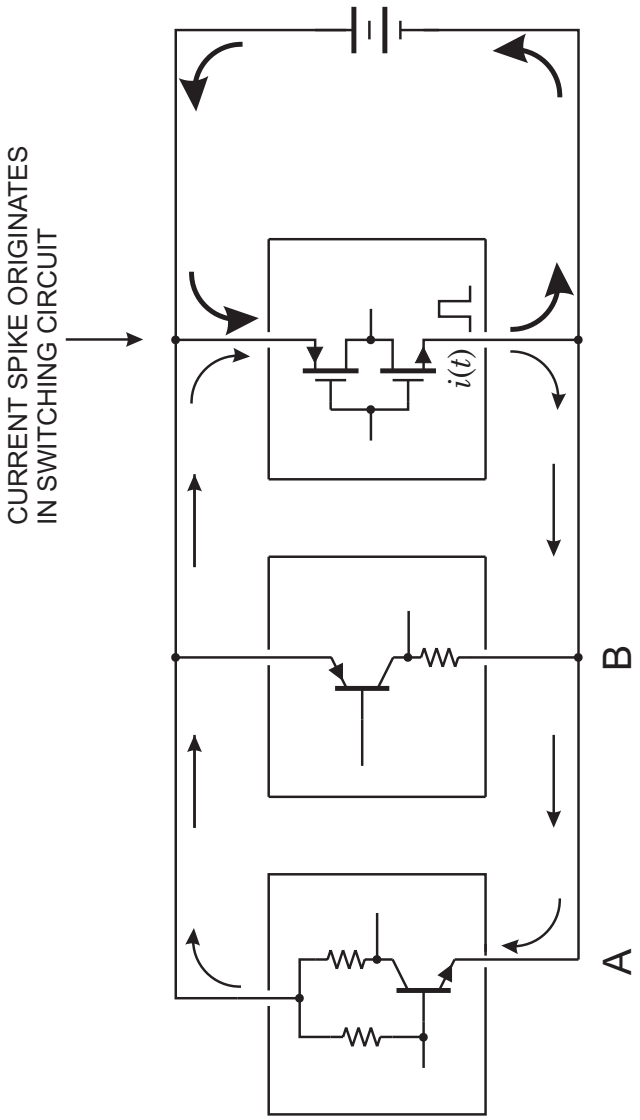

Fig. 9.15.

Figure 9.16

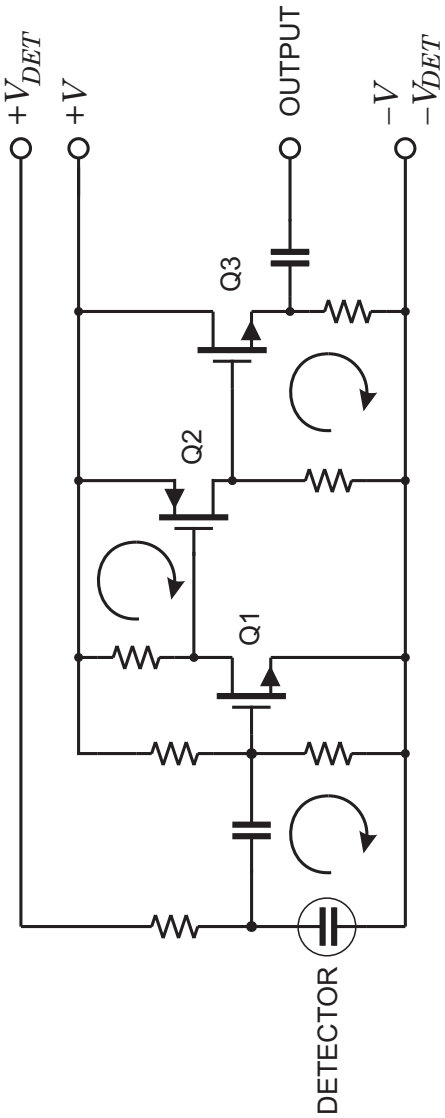

Fig. 9.16.

Figure 9.17

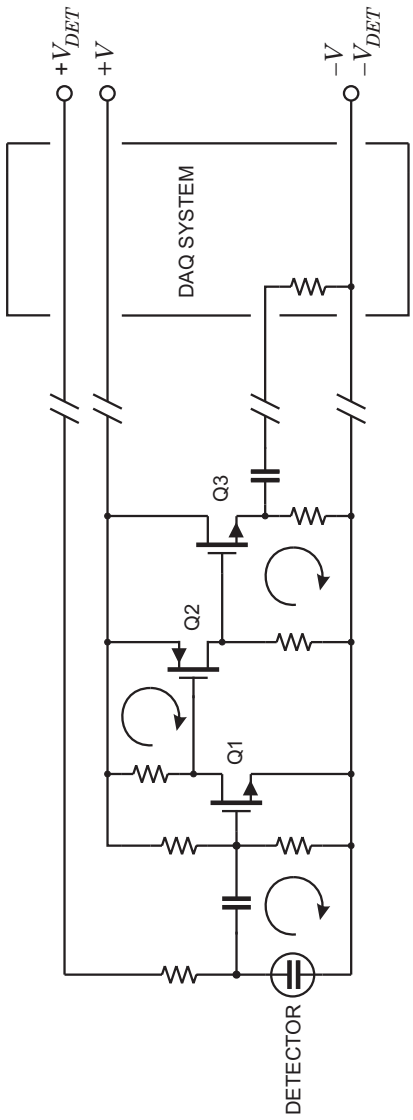

Fig. 9.17.

Figure 9.18

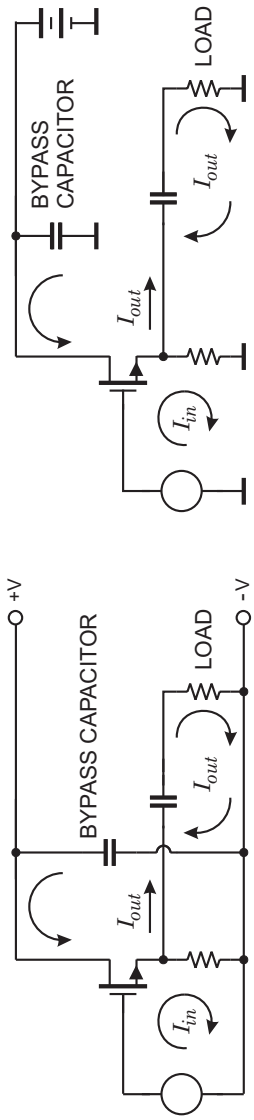

Fig. 9.18.

Figure 9.19

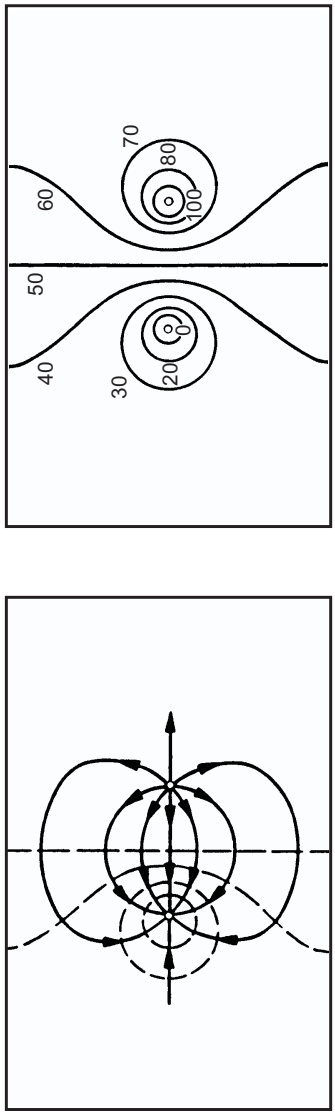

Fig. 9.19.

Figure 9.20

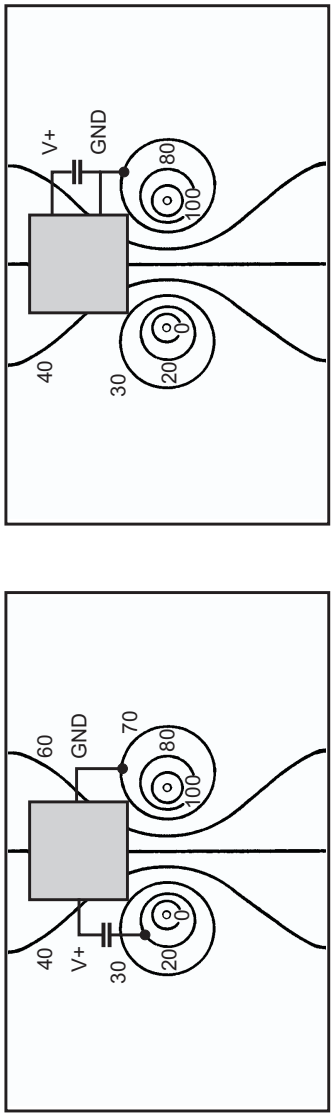

Fig. 9.20.

Figure 9.21

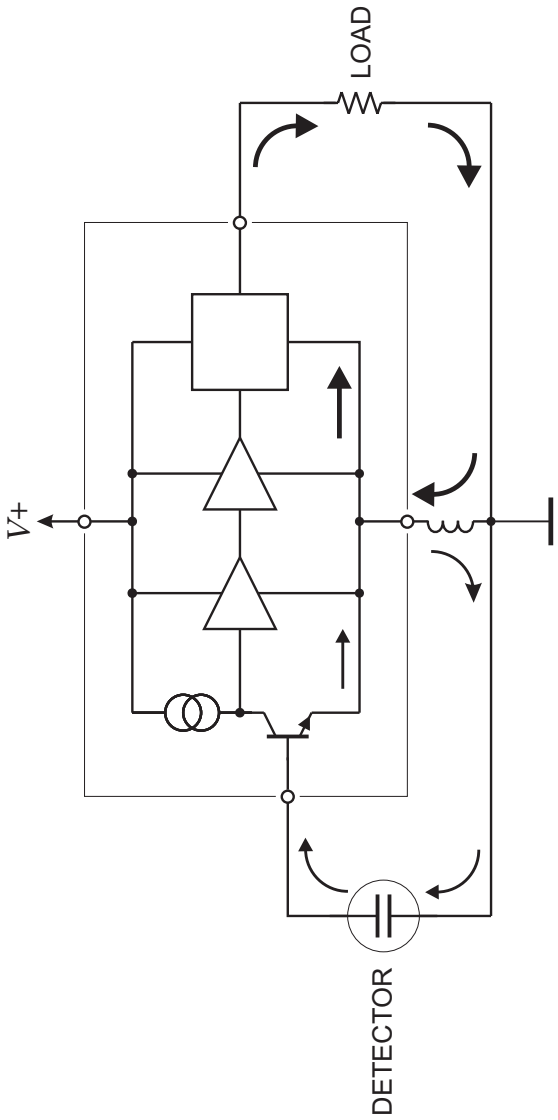

Fig. 9.21.

Figure 9.22

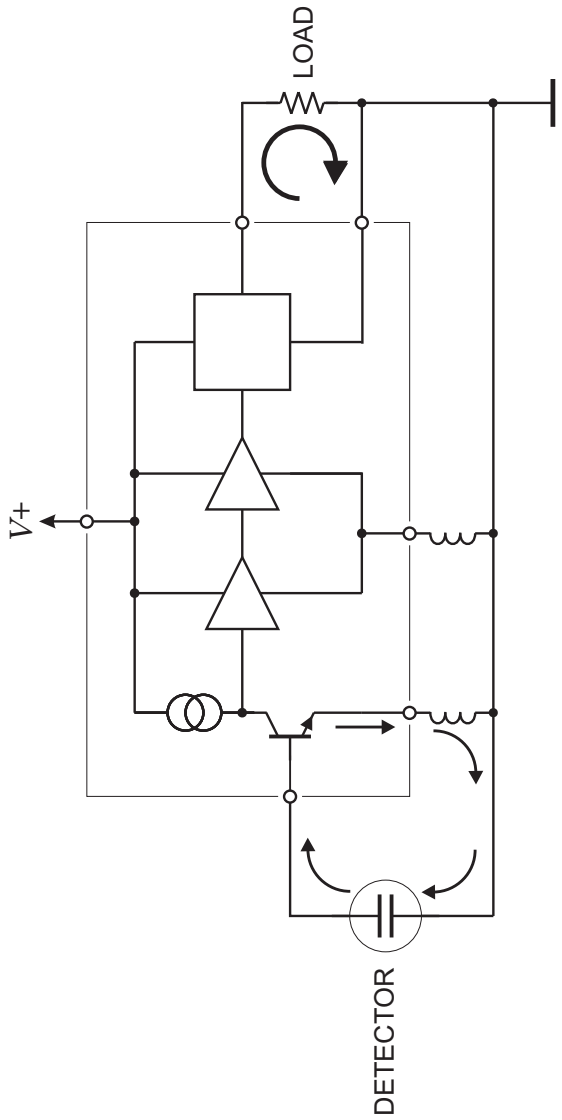

Fig. 9.22.

Figure 9.23

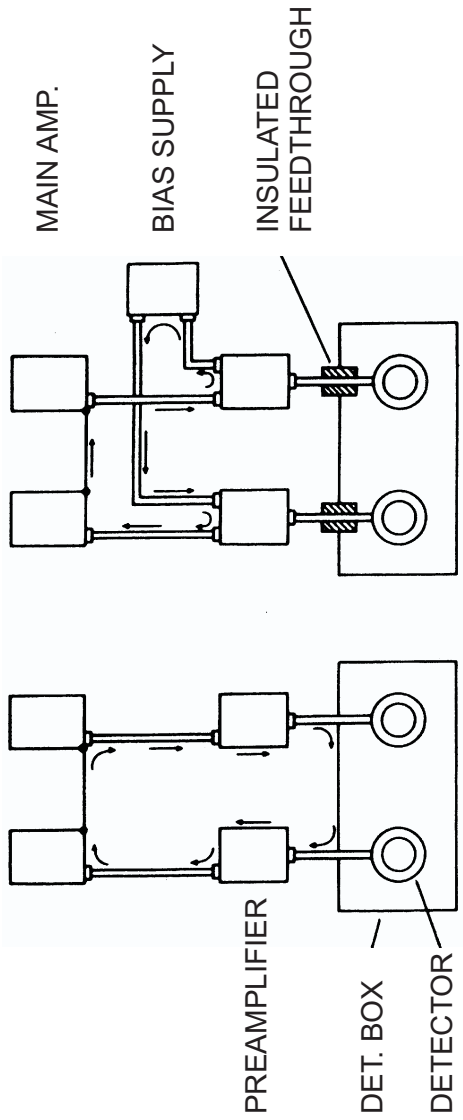

Fig. 9.23.

Figure 9.24

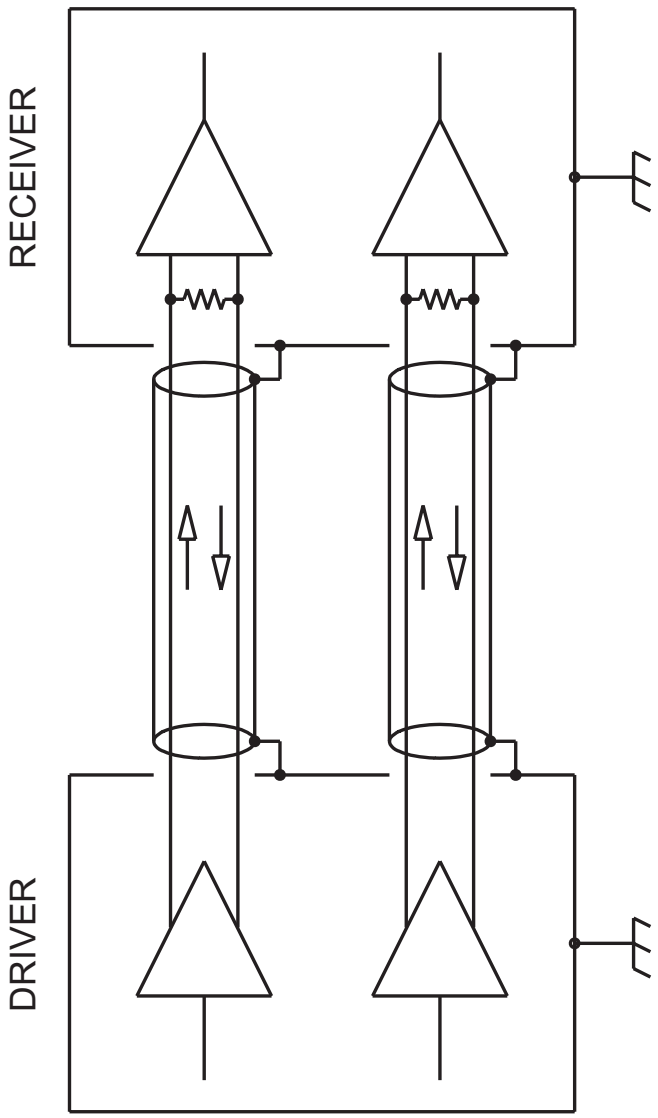

Fig. 9.24.

Figure 9.25

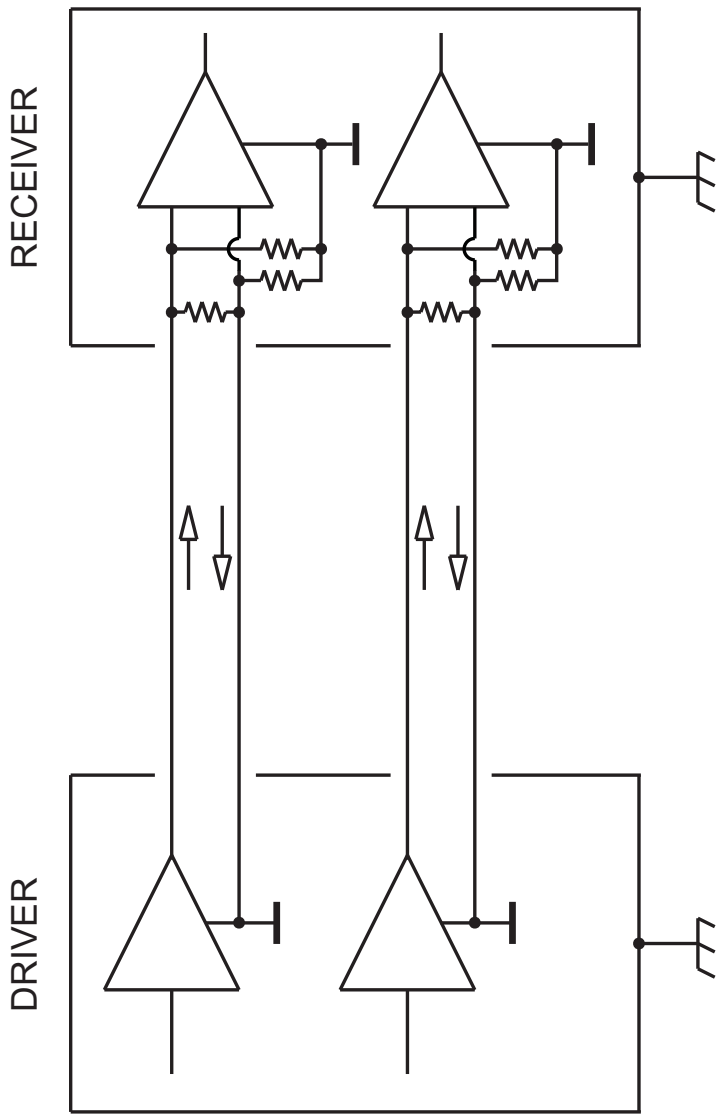

Fig. 9.25.

Figure 9.26

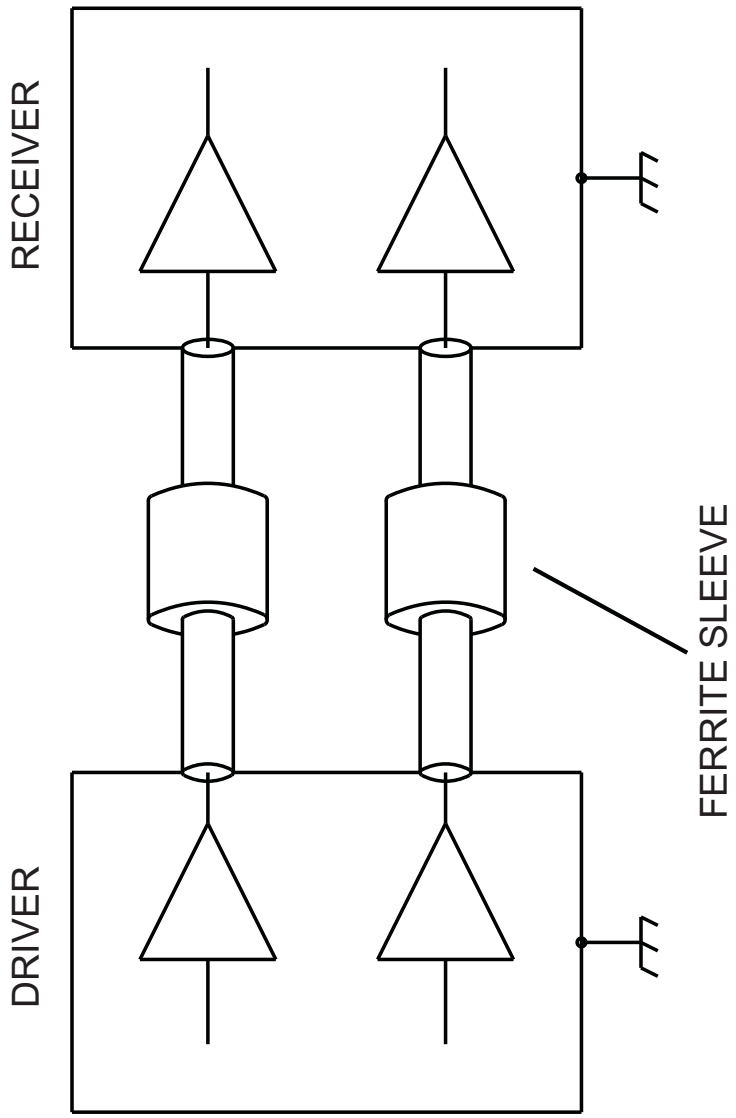

Fig. 9.26.

Figure 9.27

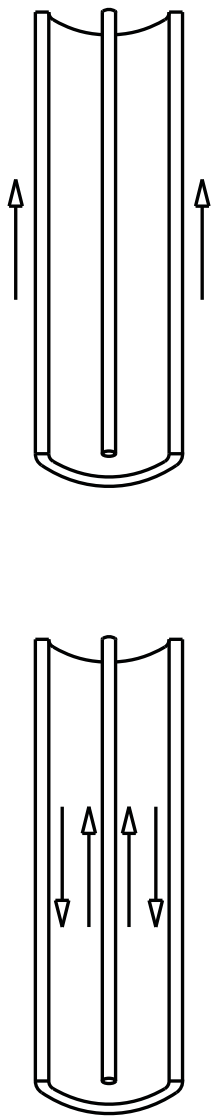

Fig. 9.27.

Figure 9.28

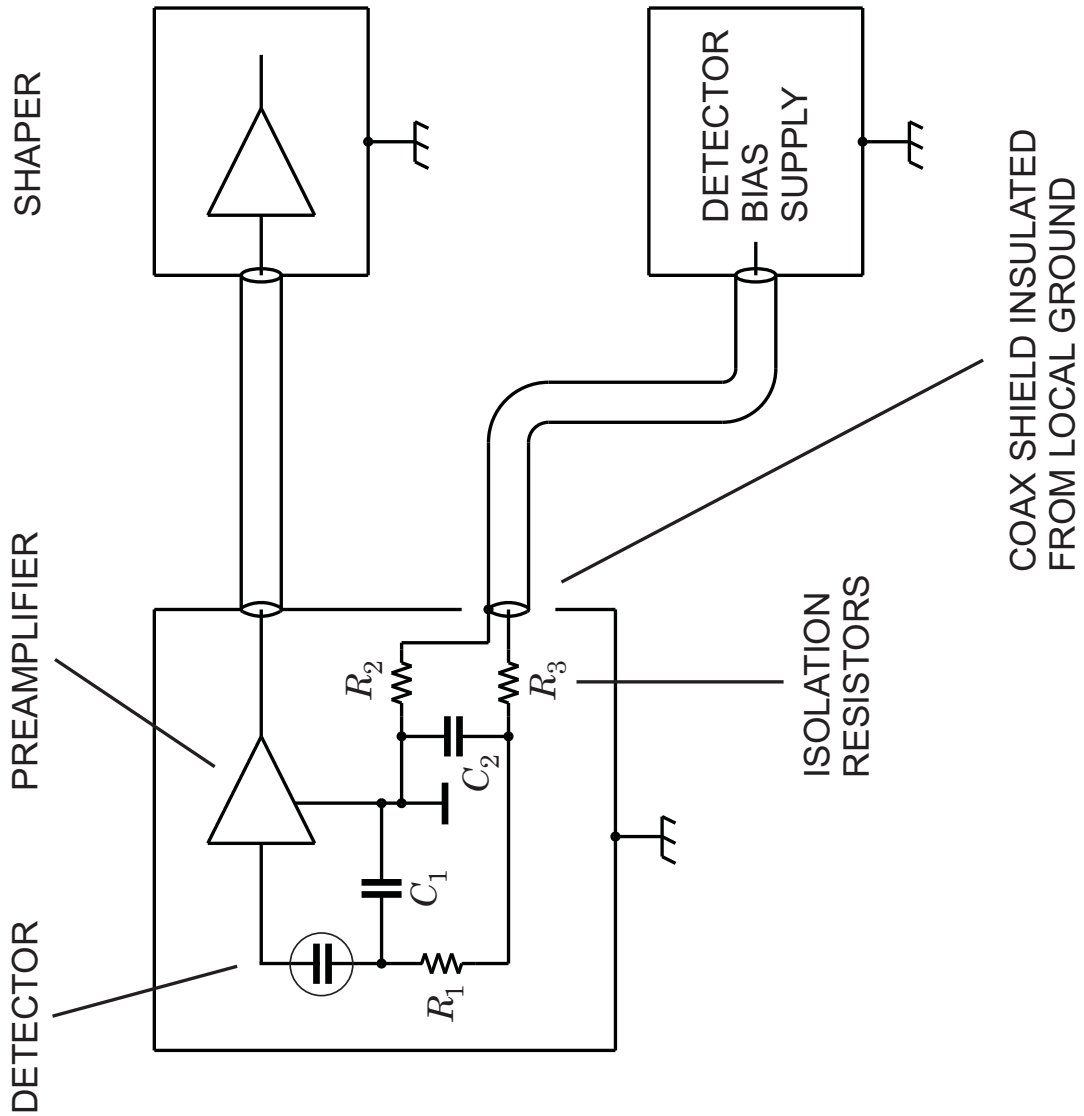

Fig. 9.28.

Figure 9.29

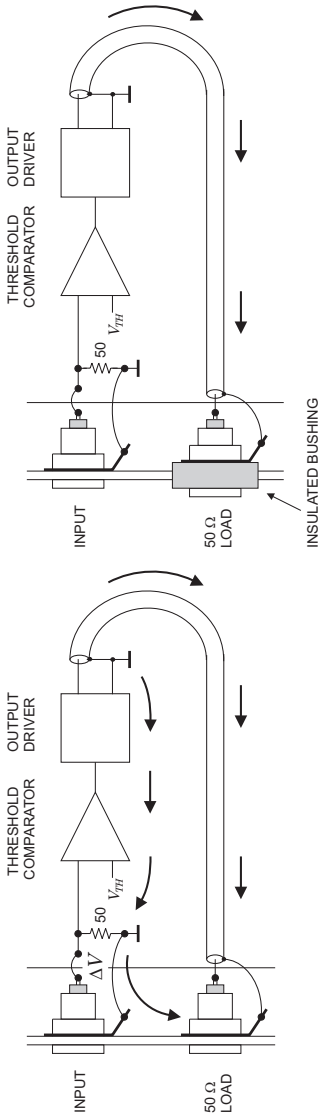

Fig. 9.29.

Figure 9.30

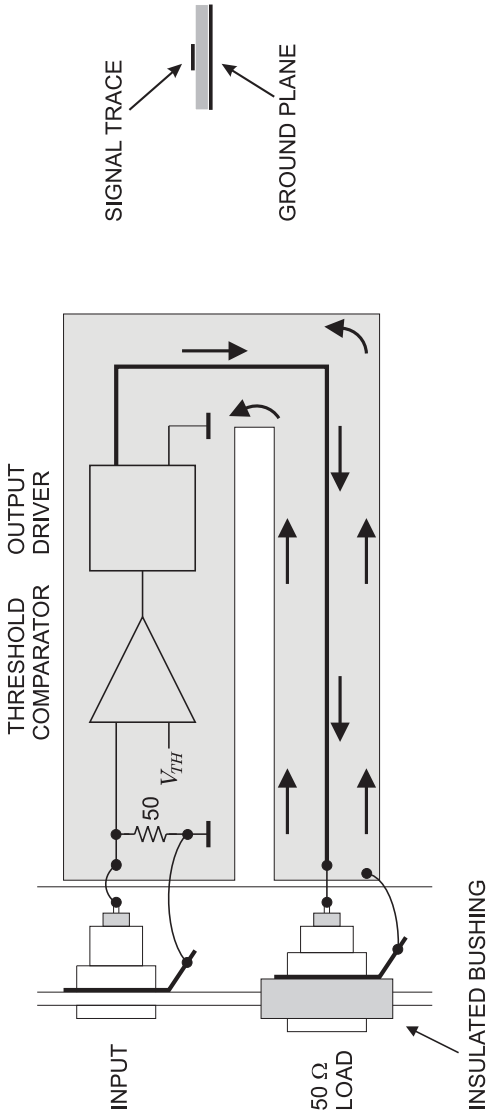

Fig. 9.30.

Figure 9.31

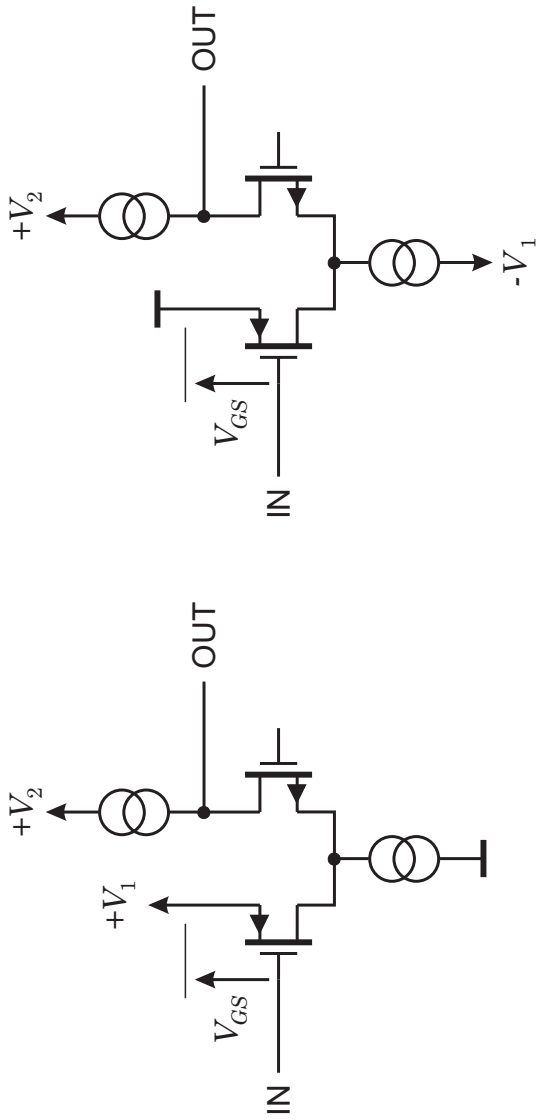

Fig. 9.31.

Figure 9.32

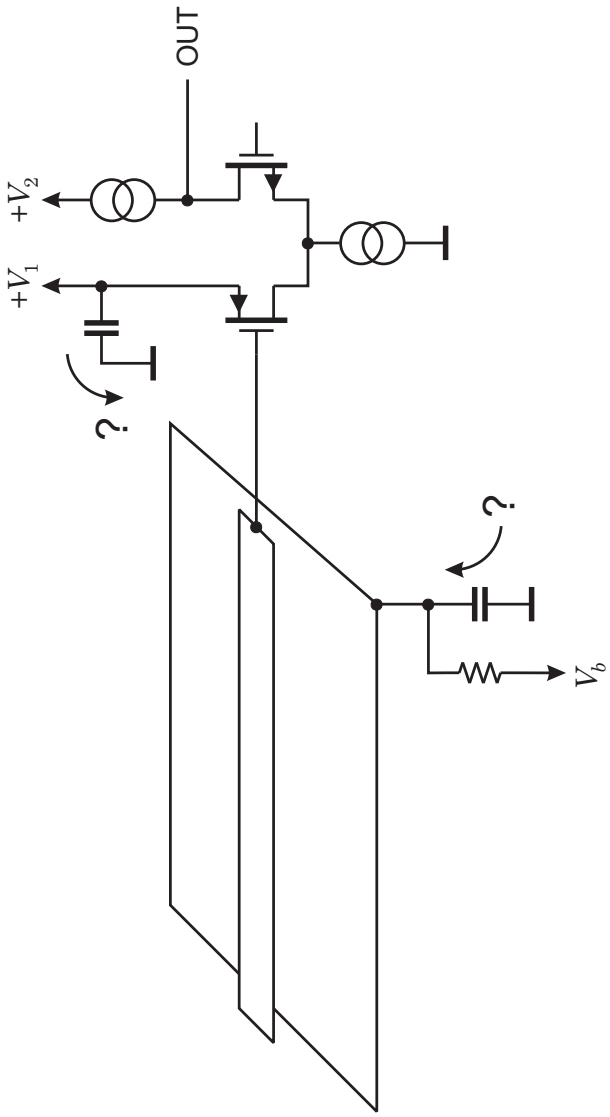

Fig. 9.32.

Figure 9.33

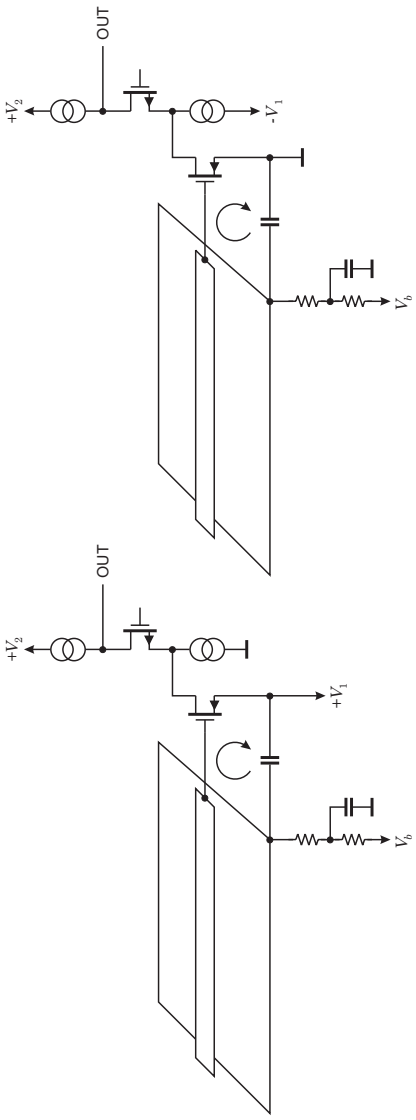

Fig. 9.33.

Figure 9.34

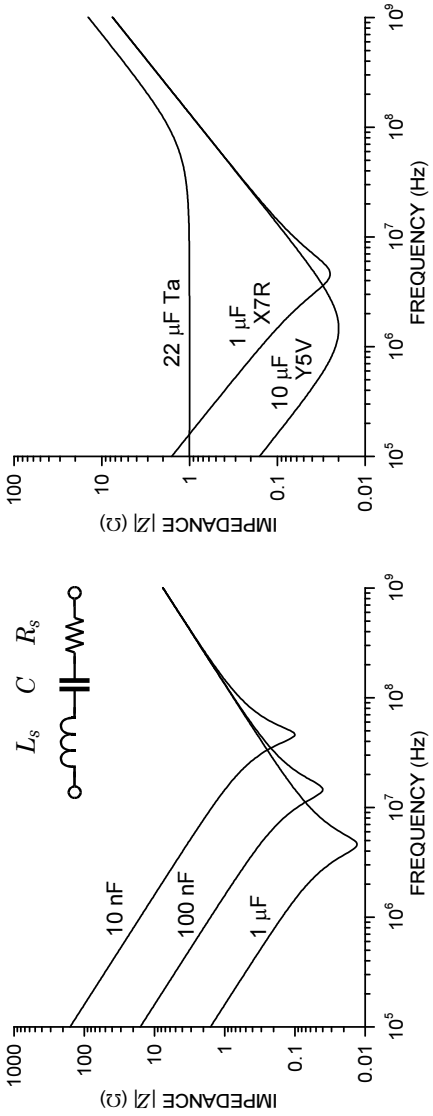

Fig. 9.34.

Figure 9.35

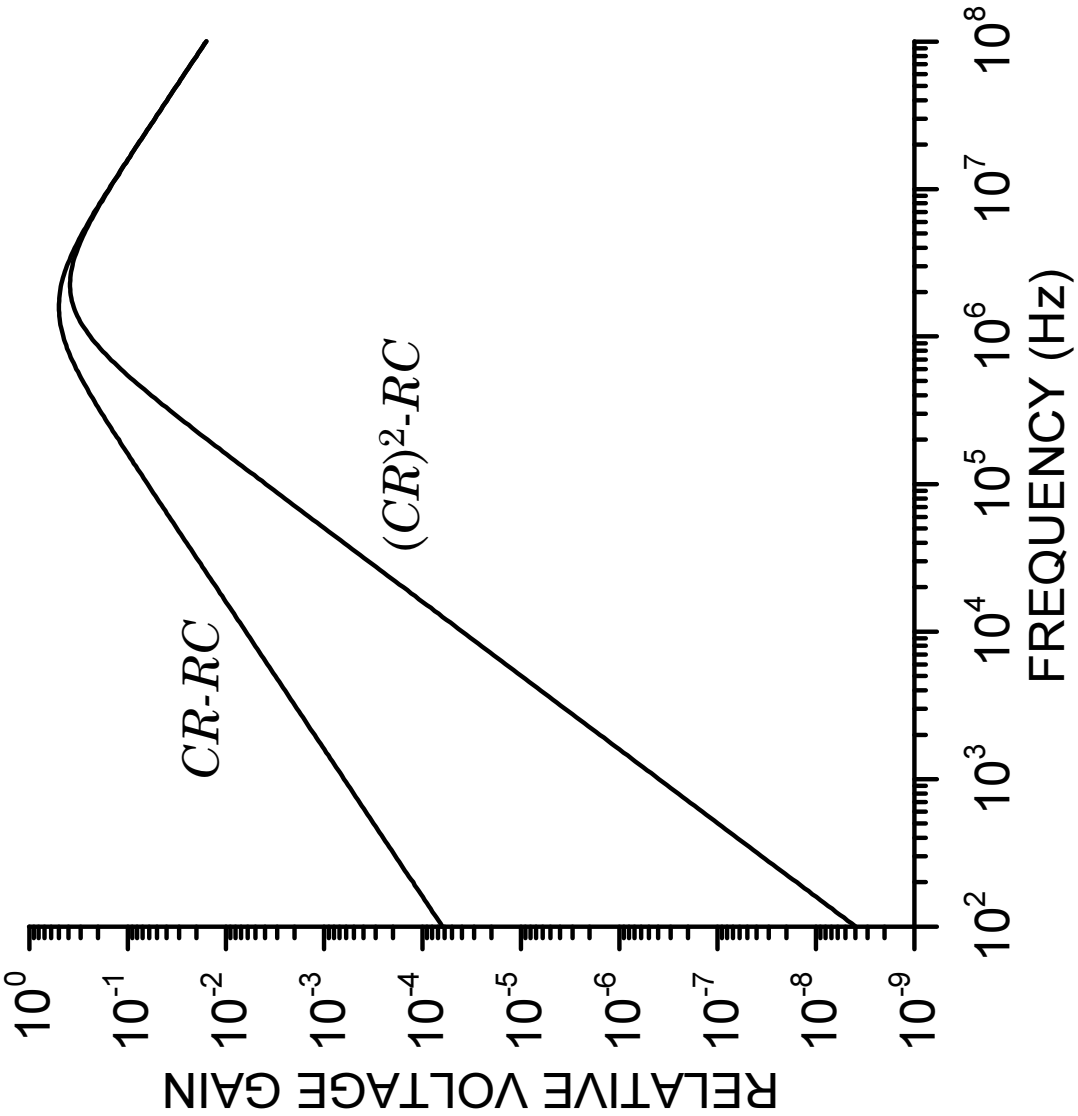

Fig. 9.35.

Figure 9.36

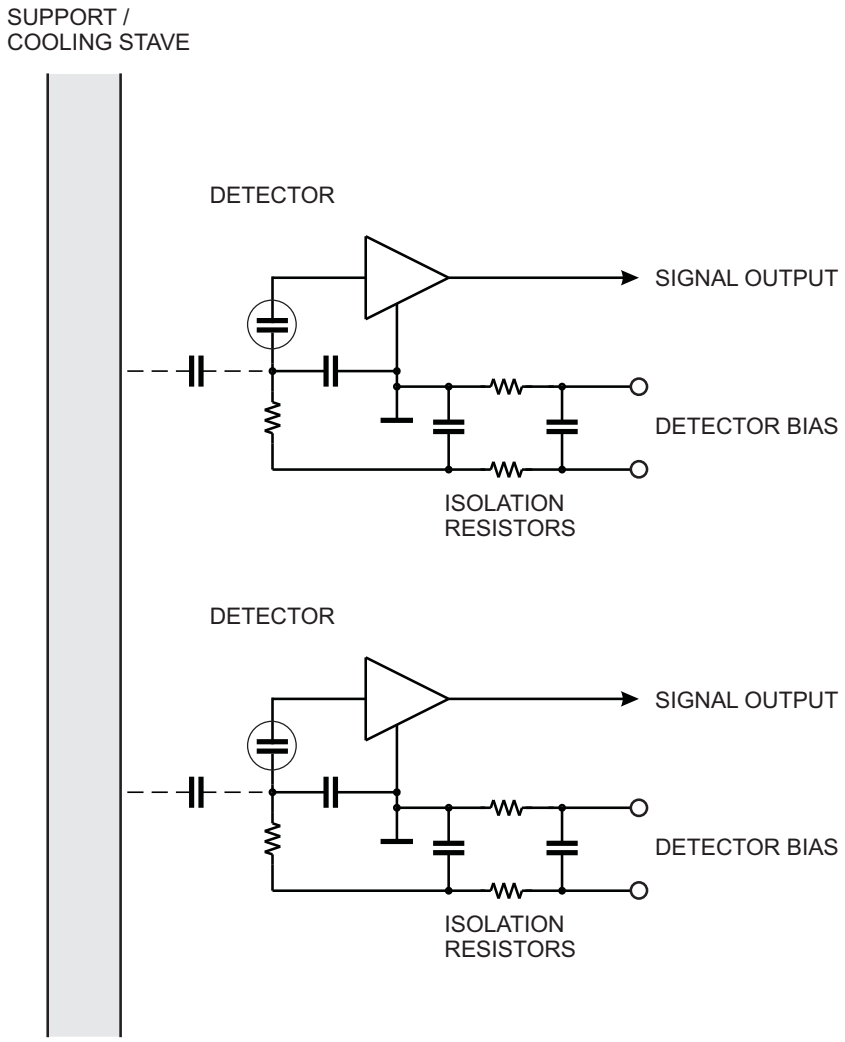

Fig. 9.36.