Figure 8.1

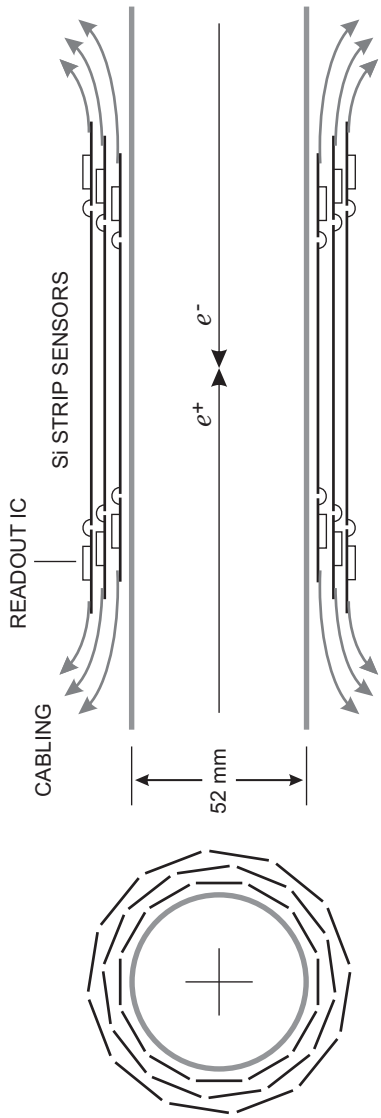

Fig. 8.1.

Figure 8.2

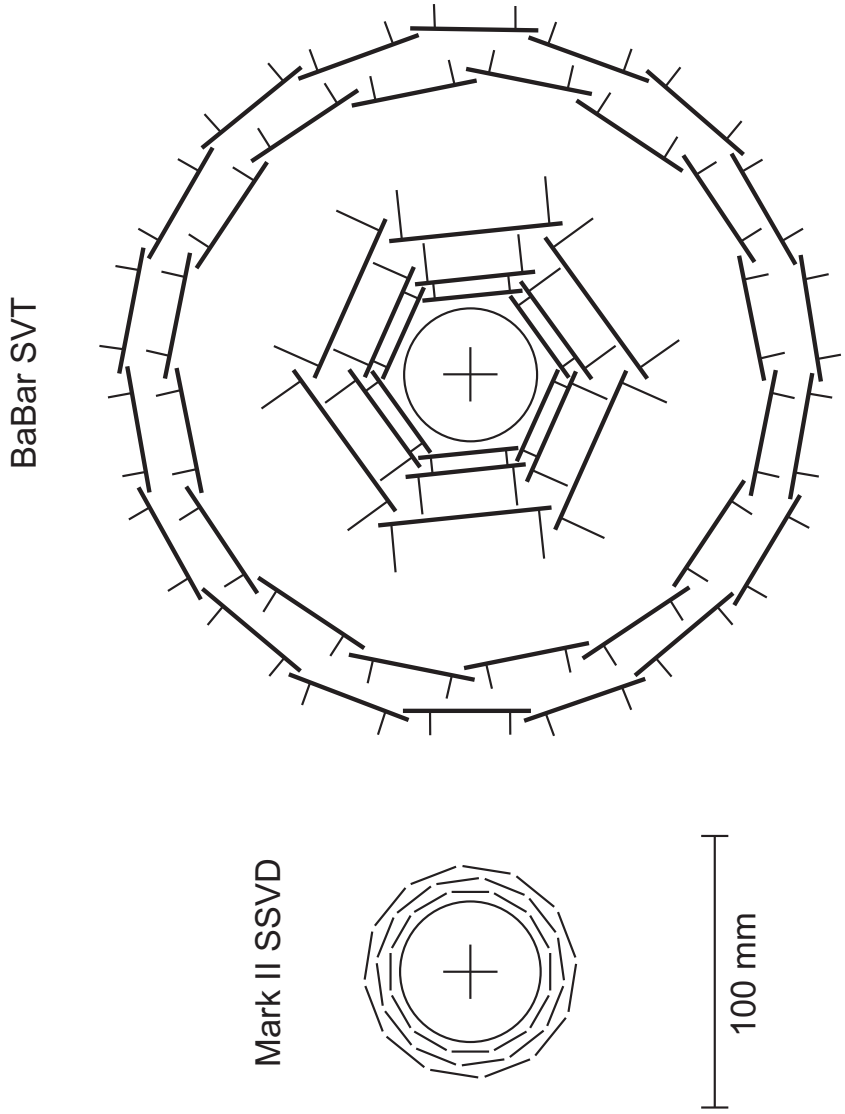

Fig. 8.2.

Figure 8.3

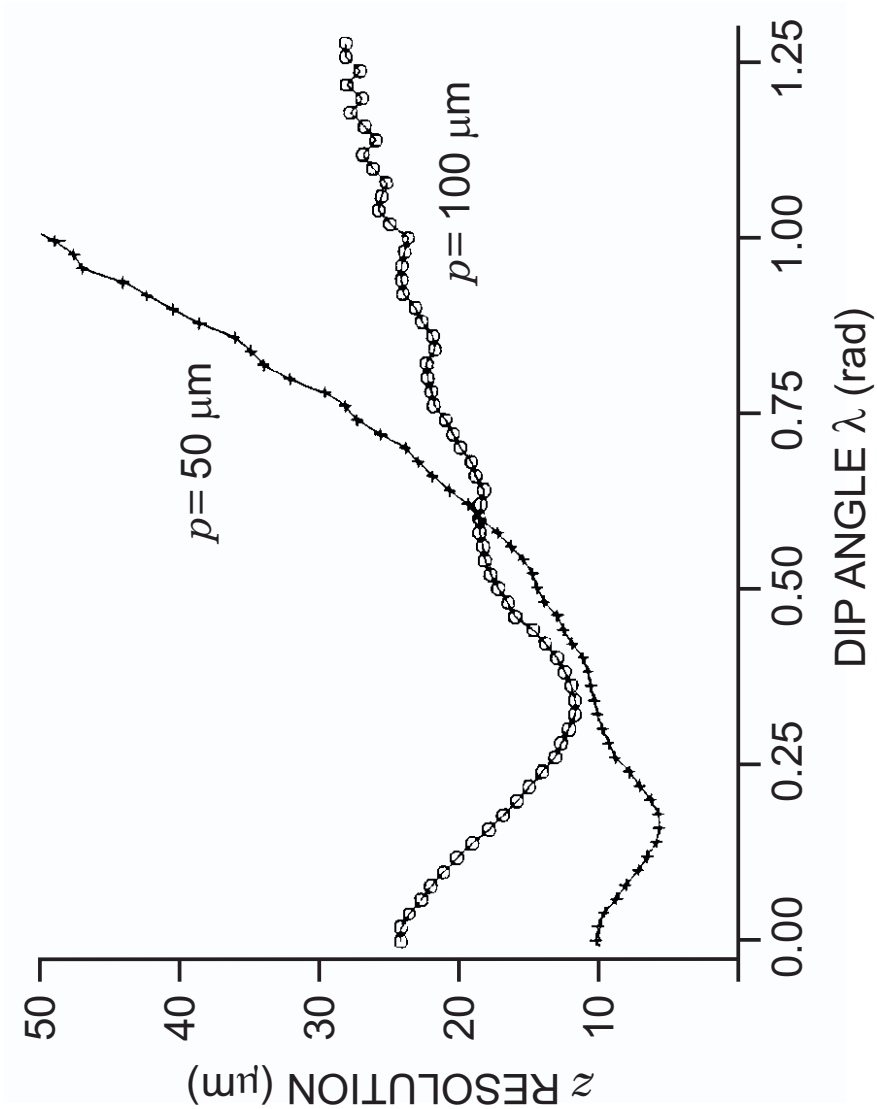

Fig. 8.3.

Figure 8.4

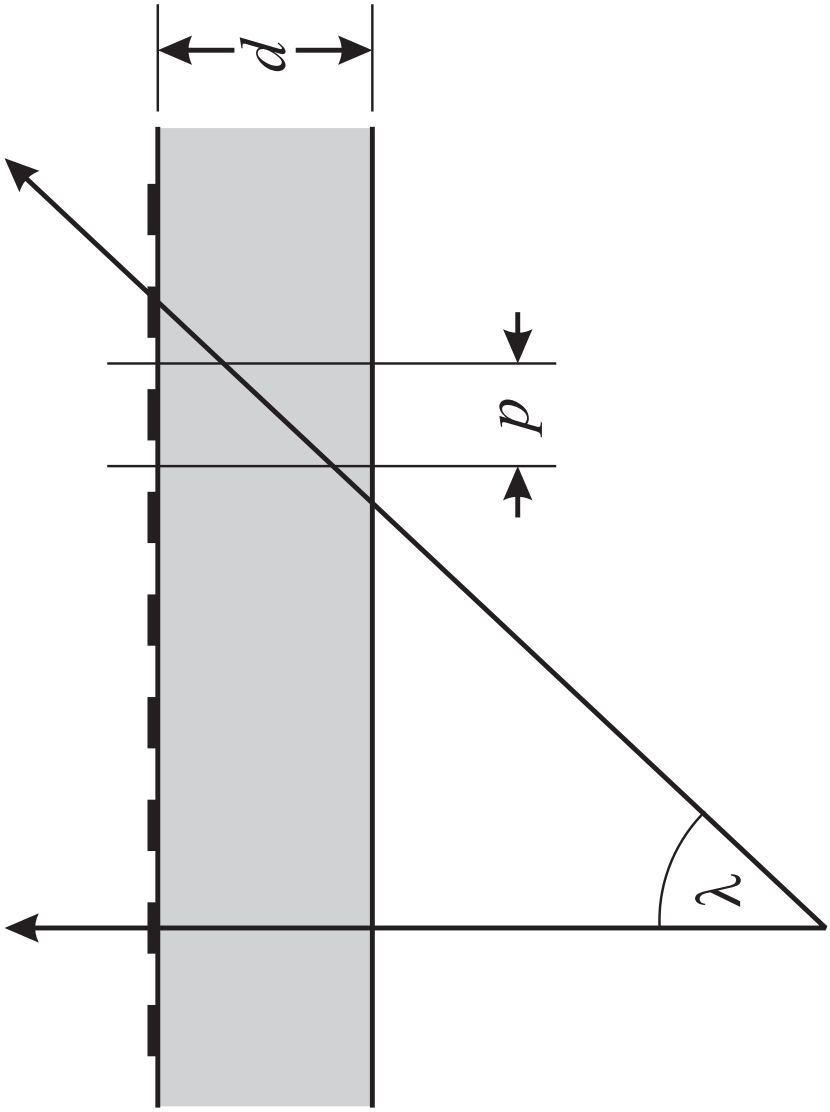

Fig. 8.4.

Figure 8.5

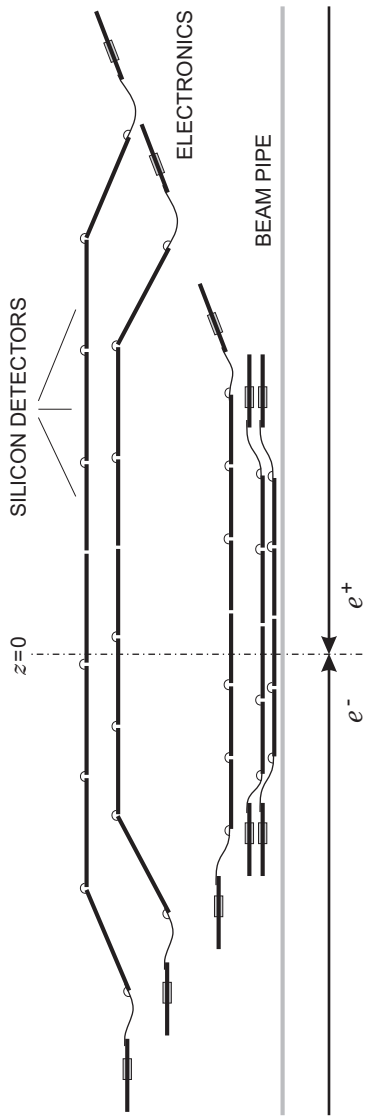

Fig. 8.5.

Figure 8.6

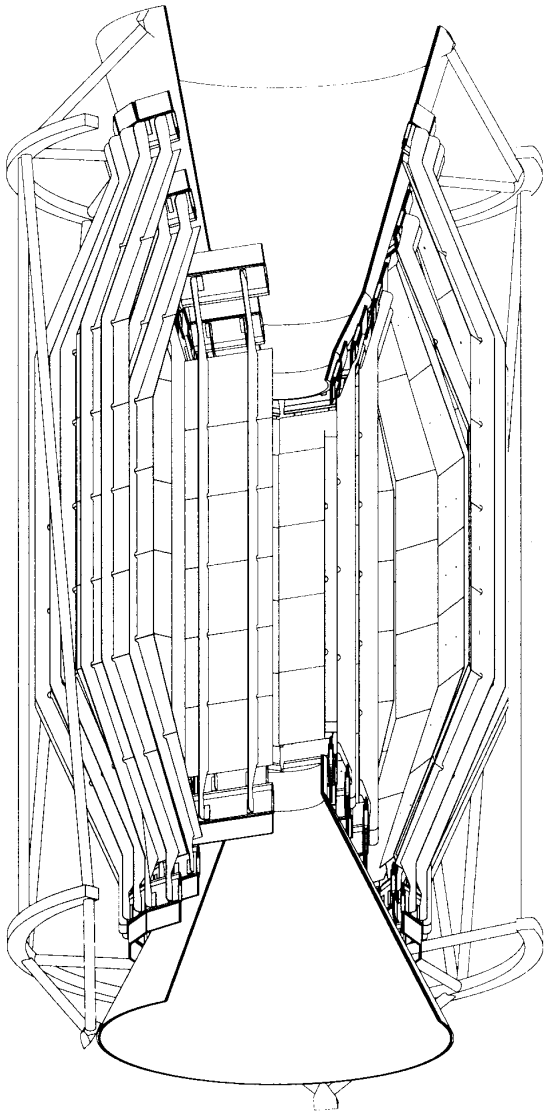

Fig. 8.6.

Figure 8.7

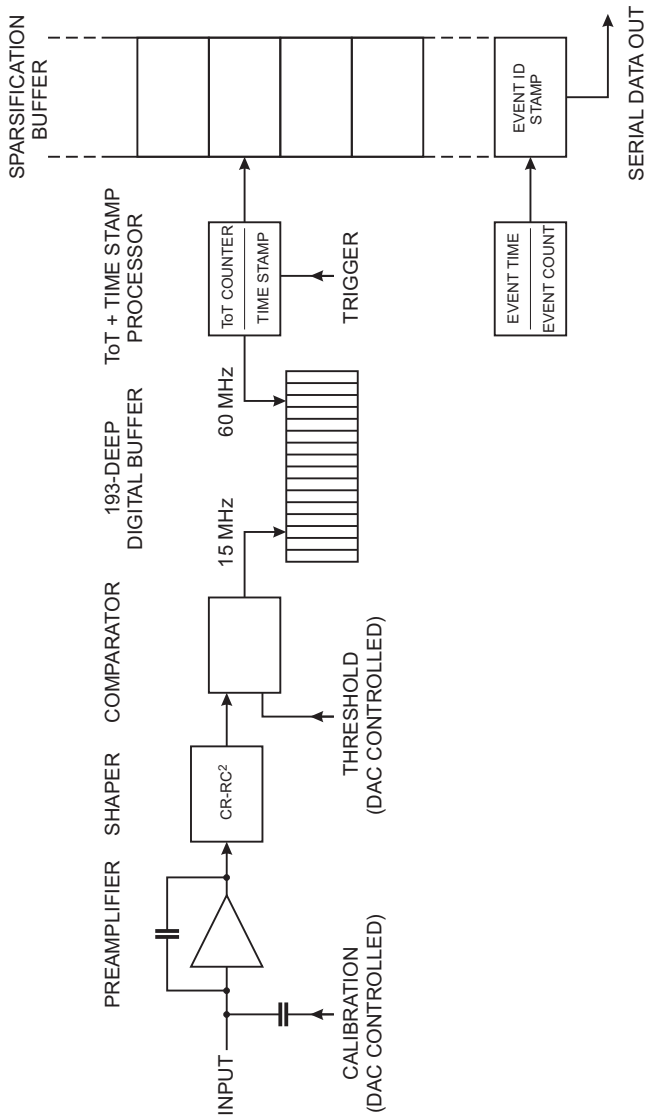

Fig. 8.7.

Figure 8.8

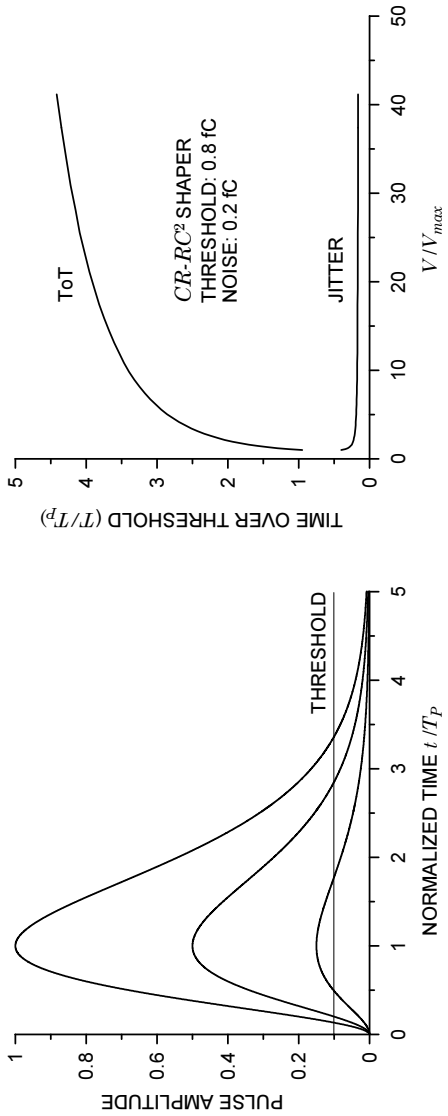

FIG. 8.8.

Figure 8.9

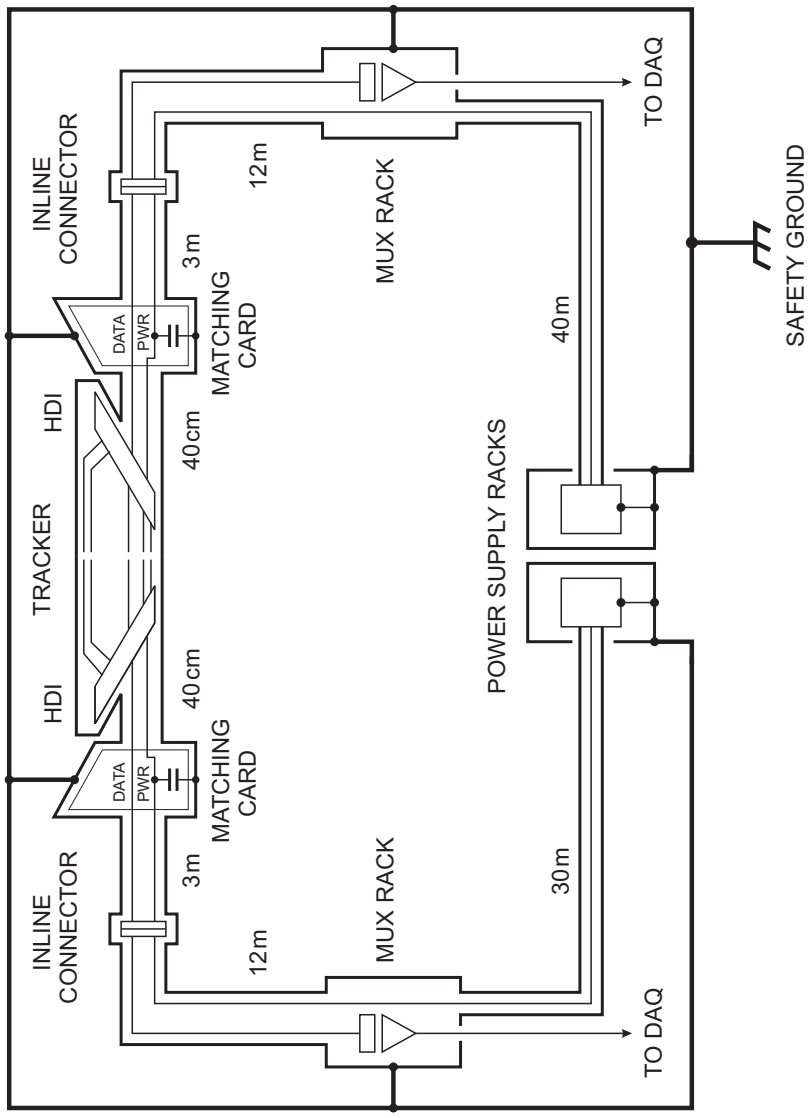

Fig. 8.9.

Figure 8.10

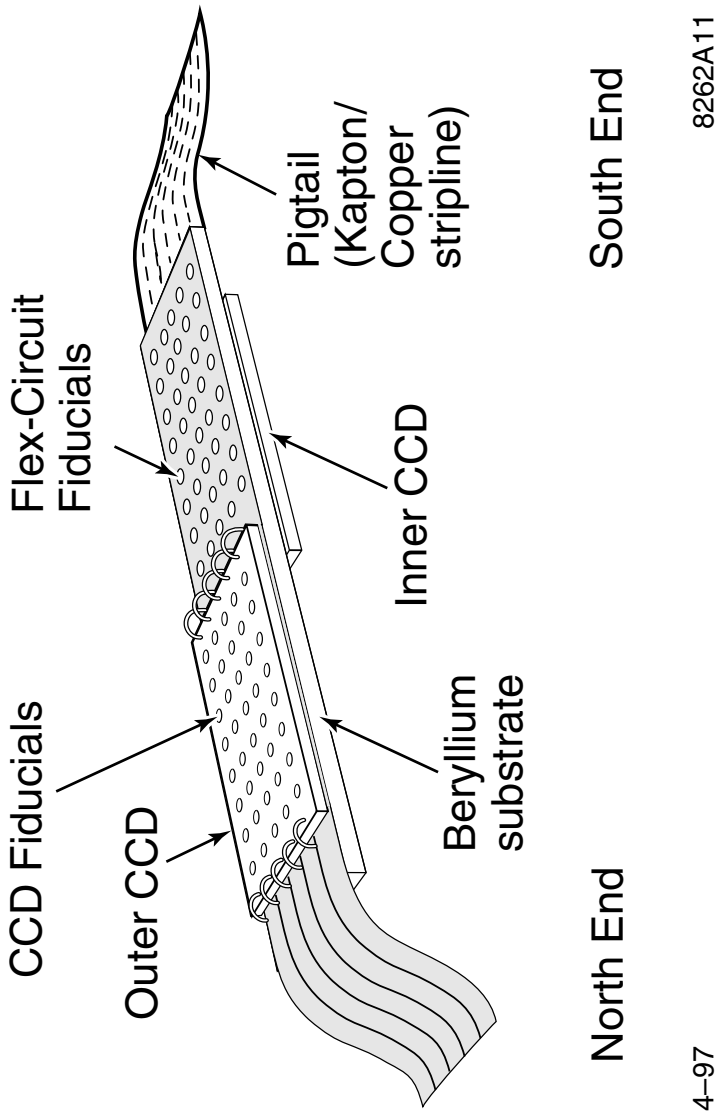

Fig. 8.10.

Figure 8.11

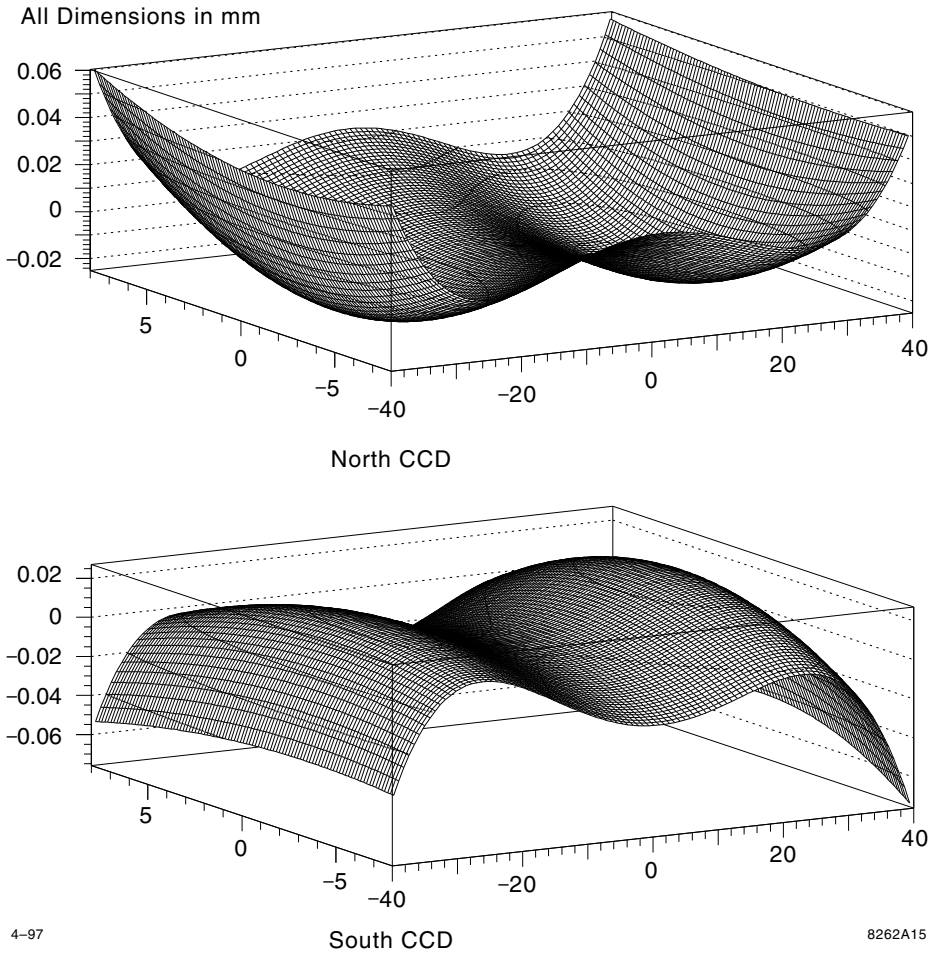

Fig. 8.11.

Figure 8.12

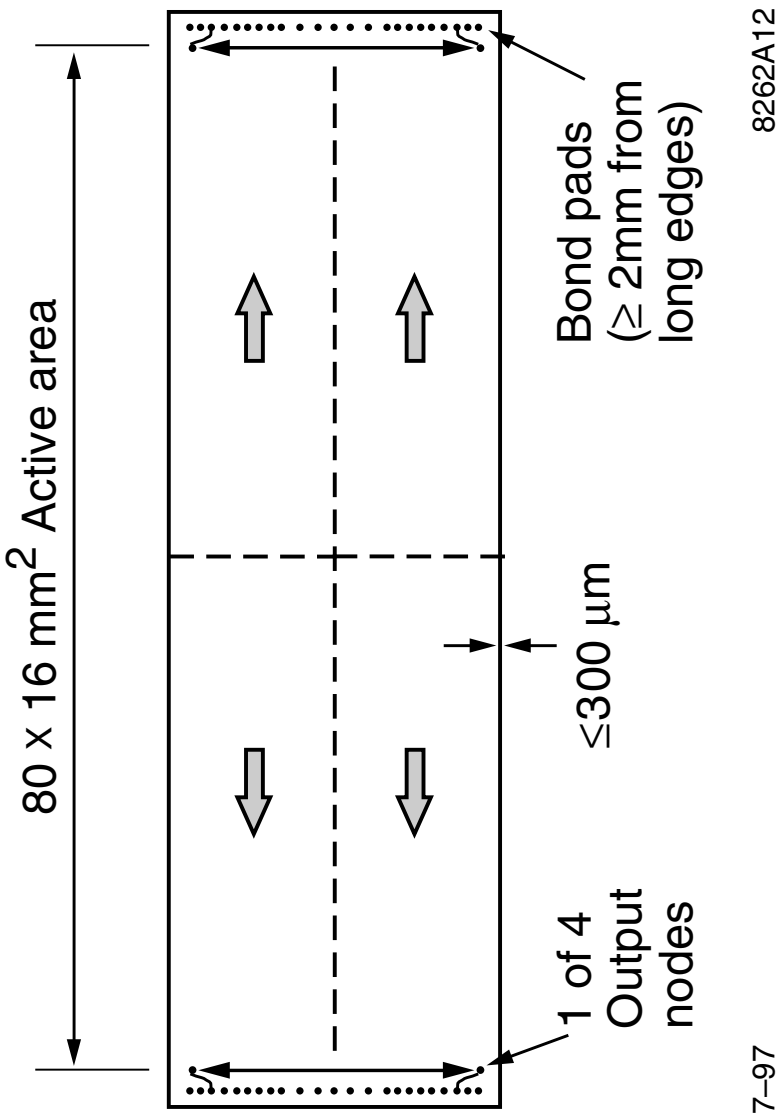

Fig. 8.12.

Figure 8.13

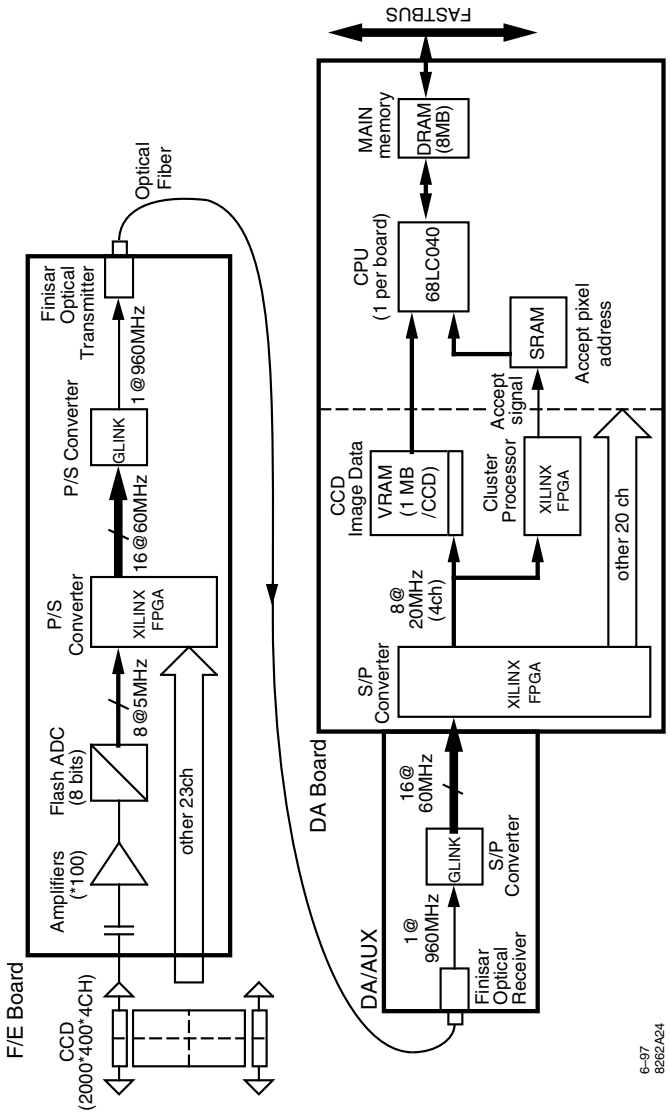

Fig. 8.13.

Figure 8.14

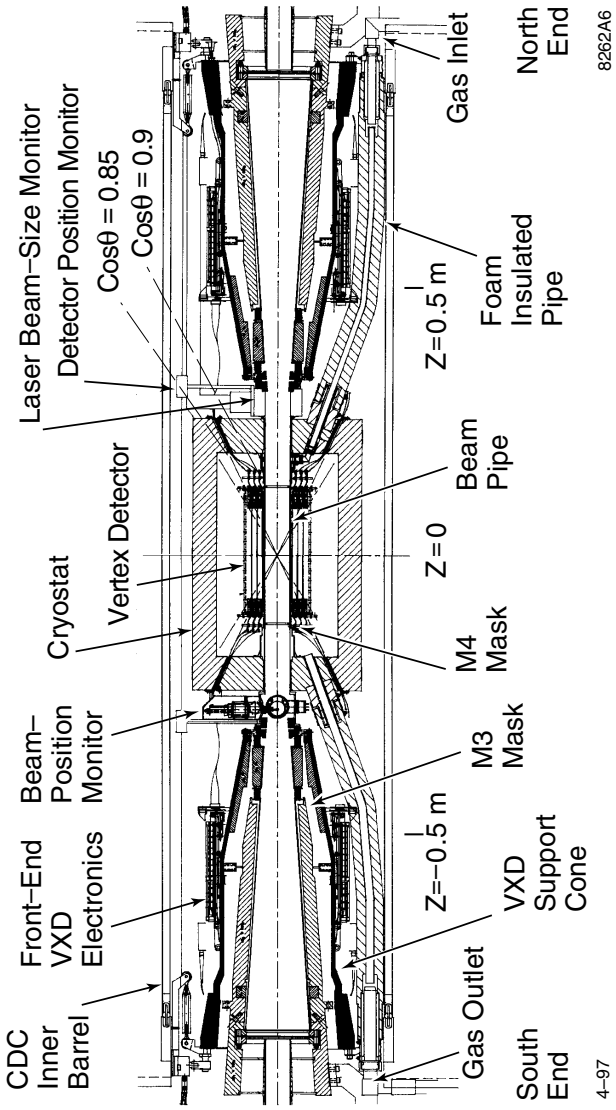

Fig. 8.14.

Figure 8.15

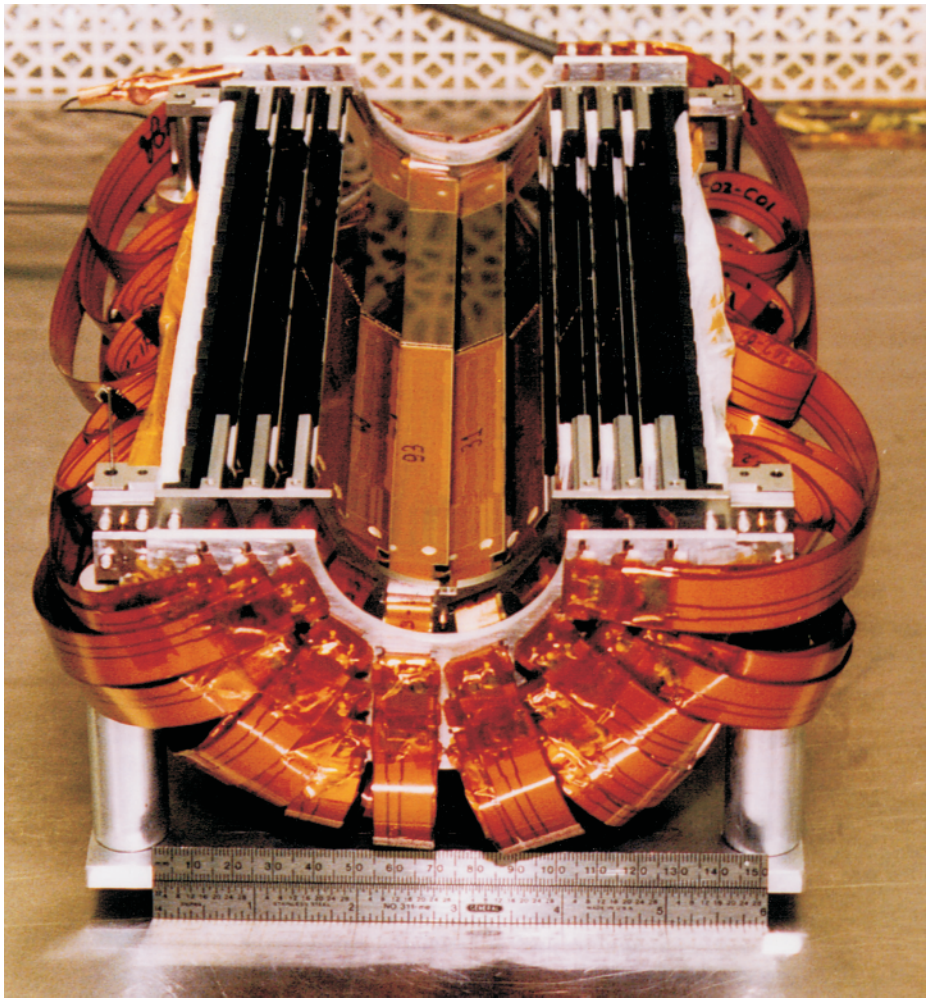

Fig. 8.15.

Figure 8.16

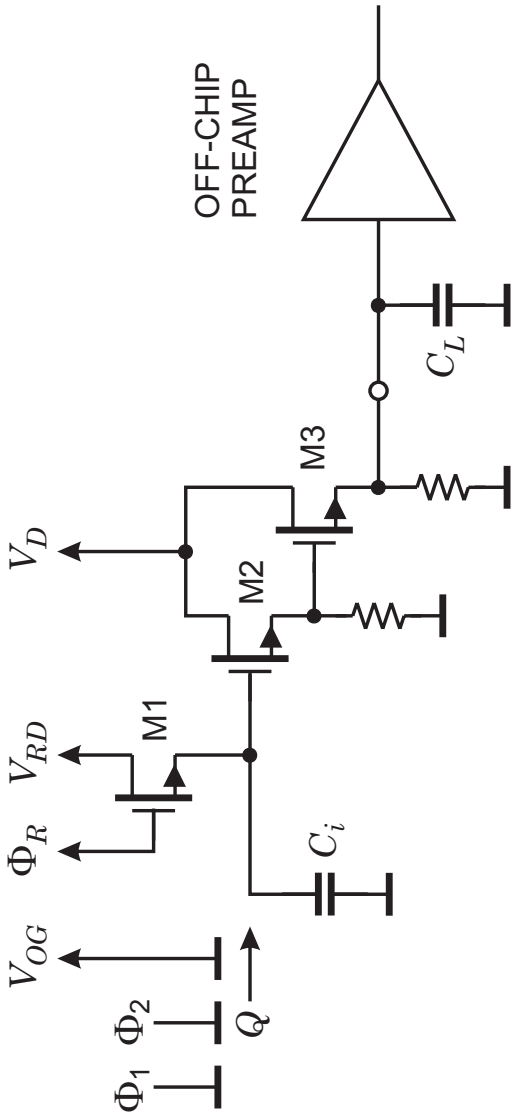

Fig. 8.16.

Figure 8.17

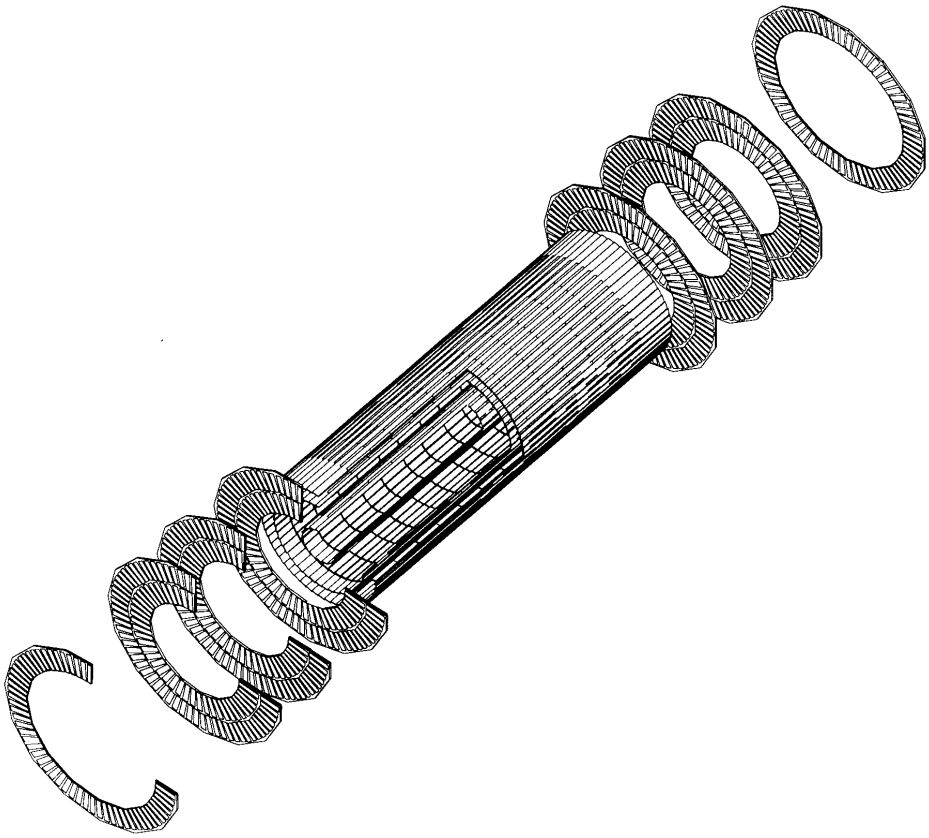

Fig. 8.17.

Figure 8.18

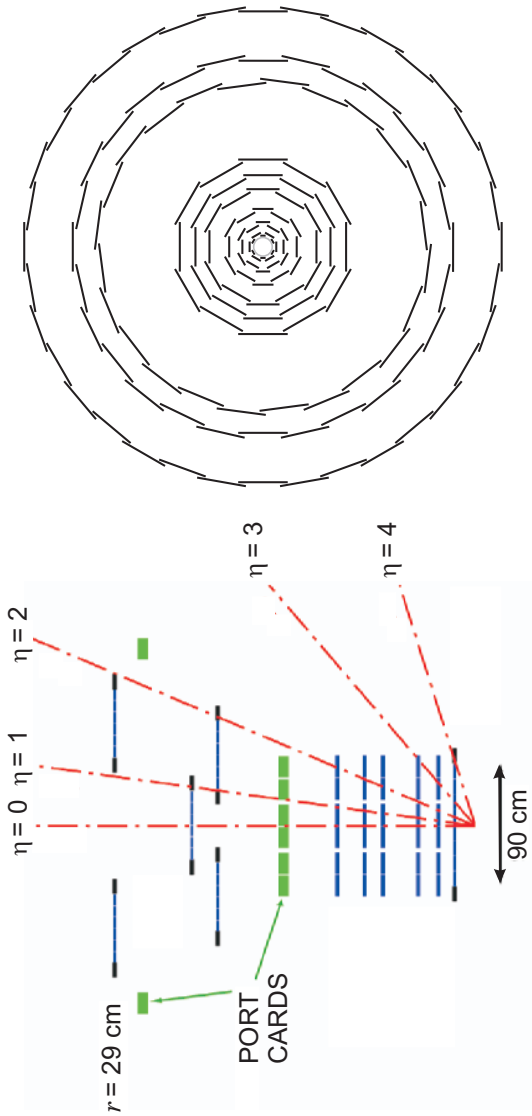

FIG. 8.18.

Figure 8.19

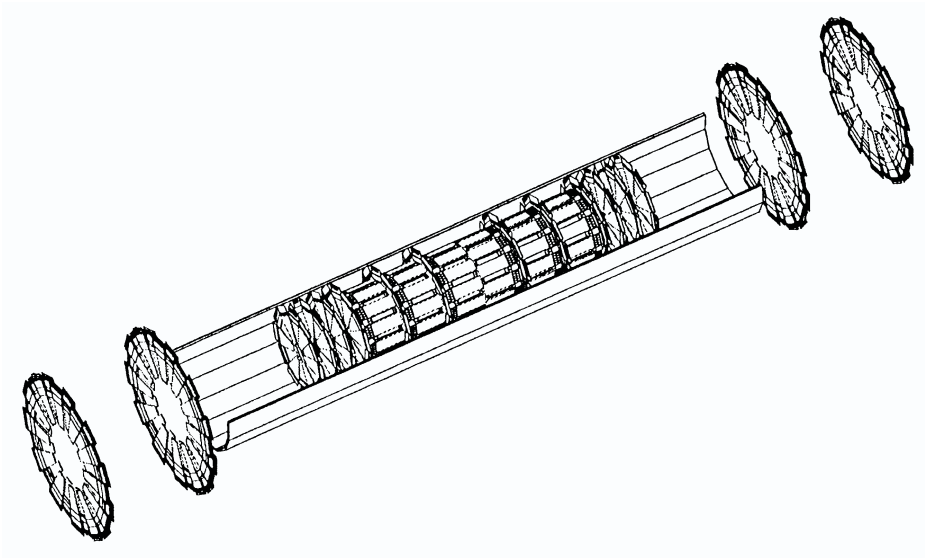

Fig. 8.19.

Figure 8.20

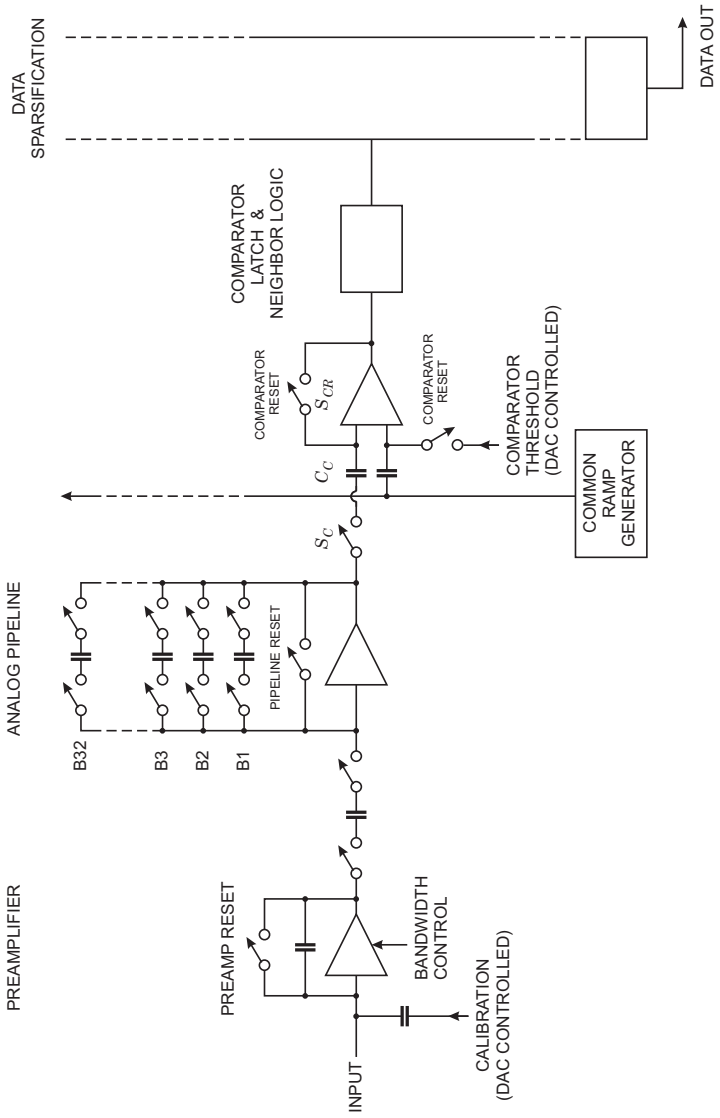

Fig. 8.20.

Figure 8.21

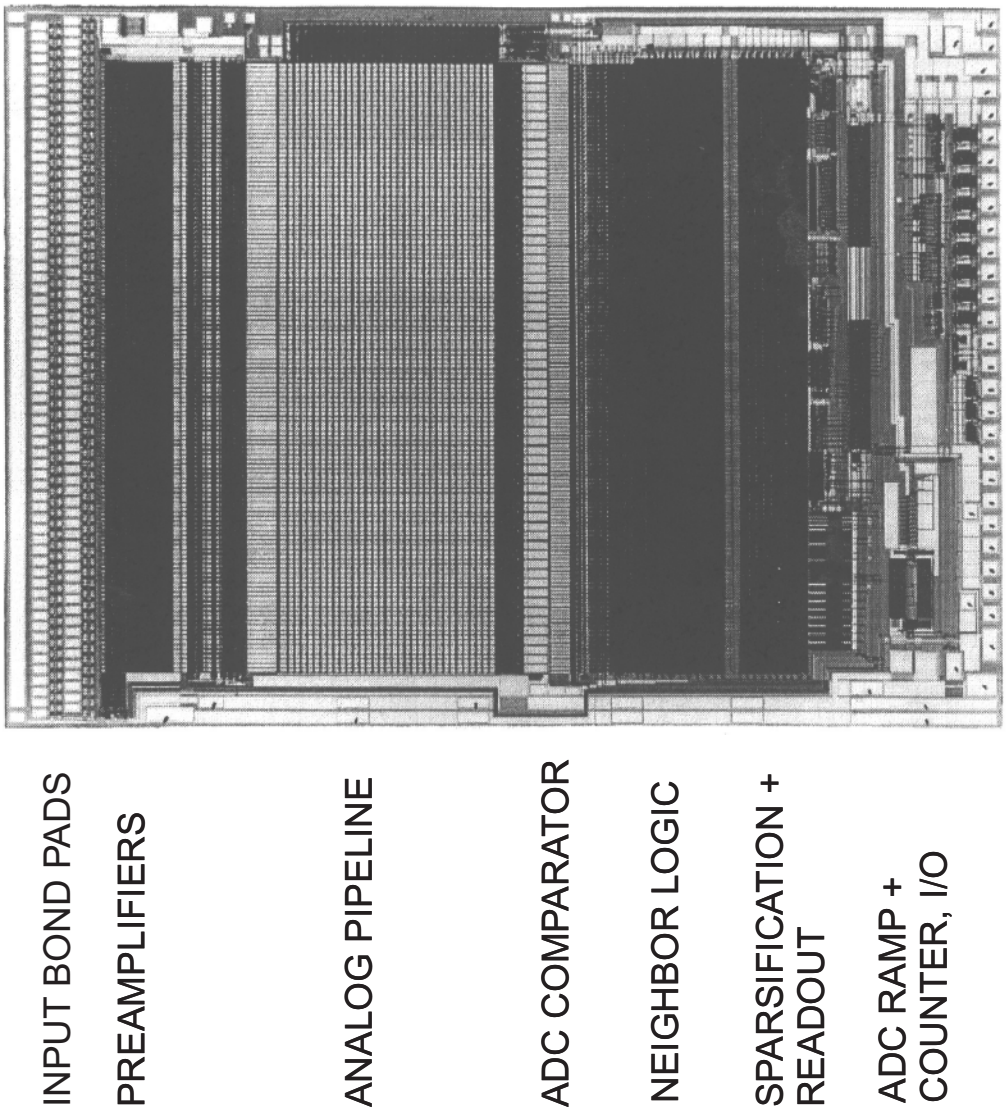

Fig. 8.21.

Figure 8.22

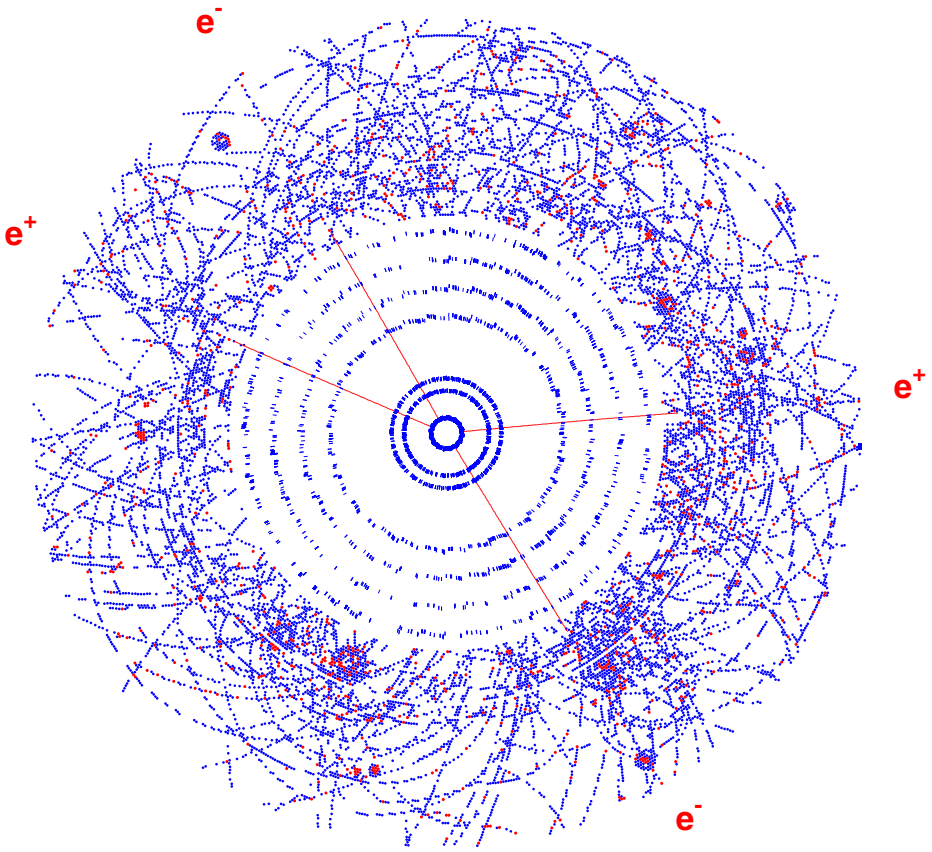

Fig. 8.22.

Figure 8.23

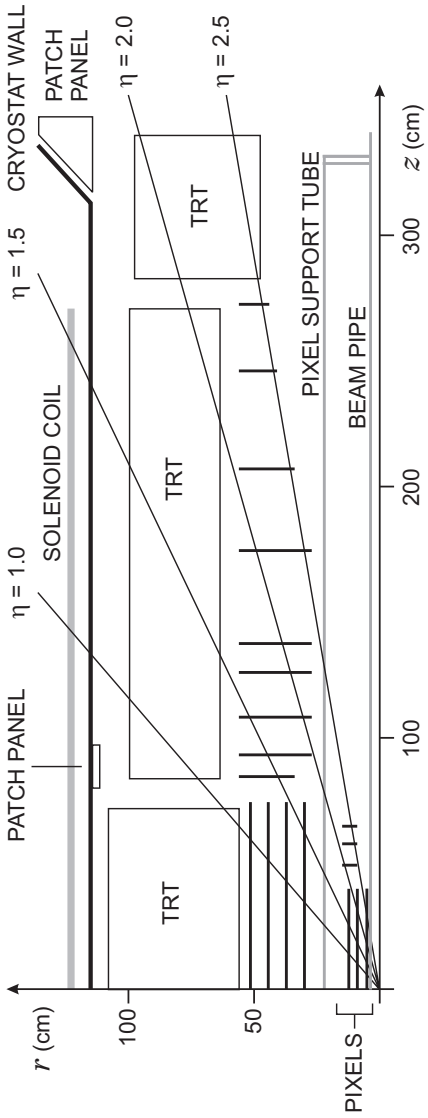

Fig. 8.23.

Figure 8.24

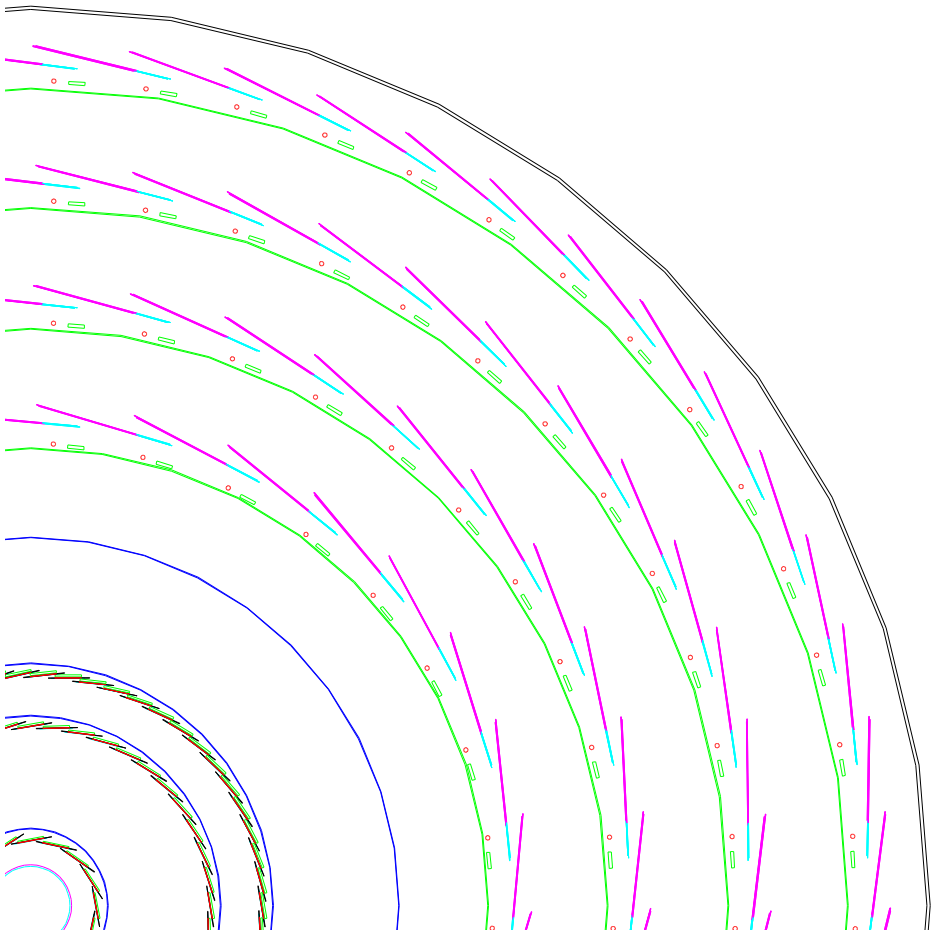

Fig. 8.24.

Figure 8.25

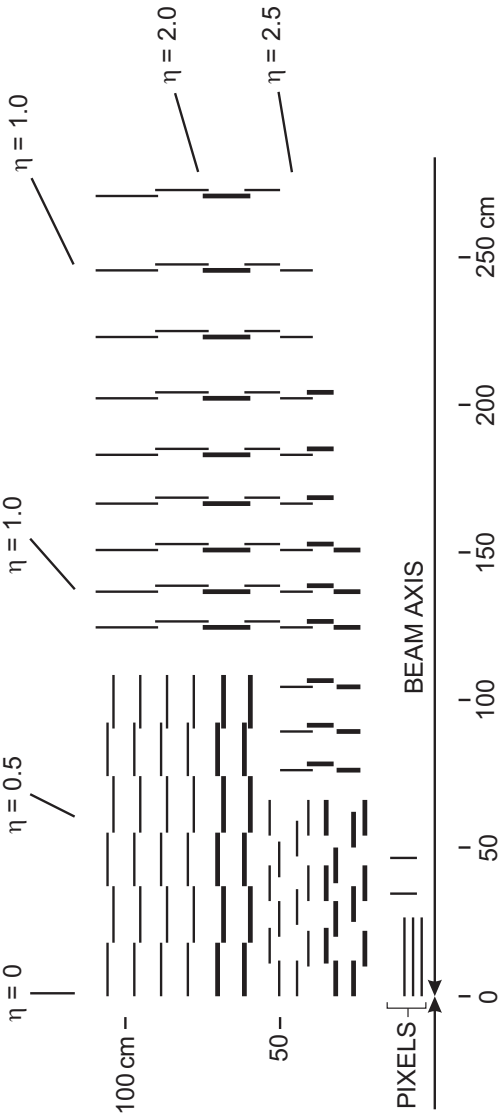

Fig. 8.25.

Figure 8.26

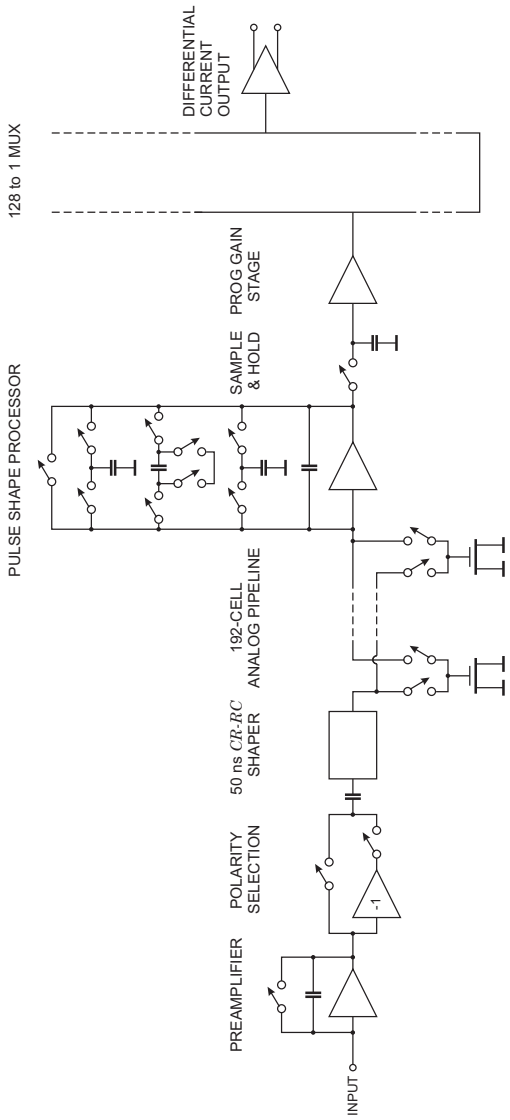

Fig. 8.26.

Figure 8.27

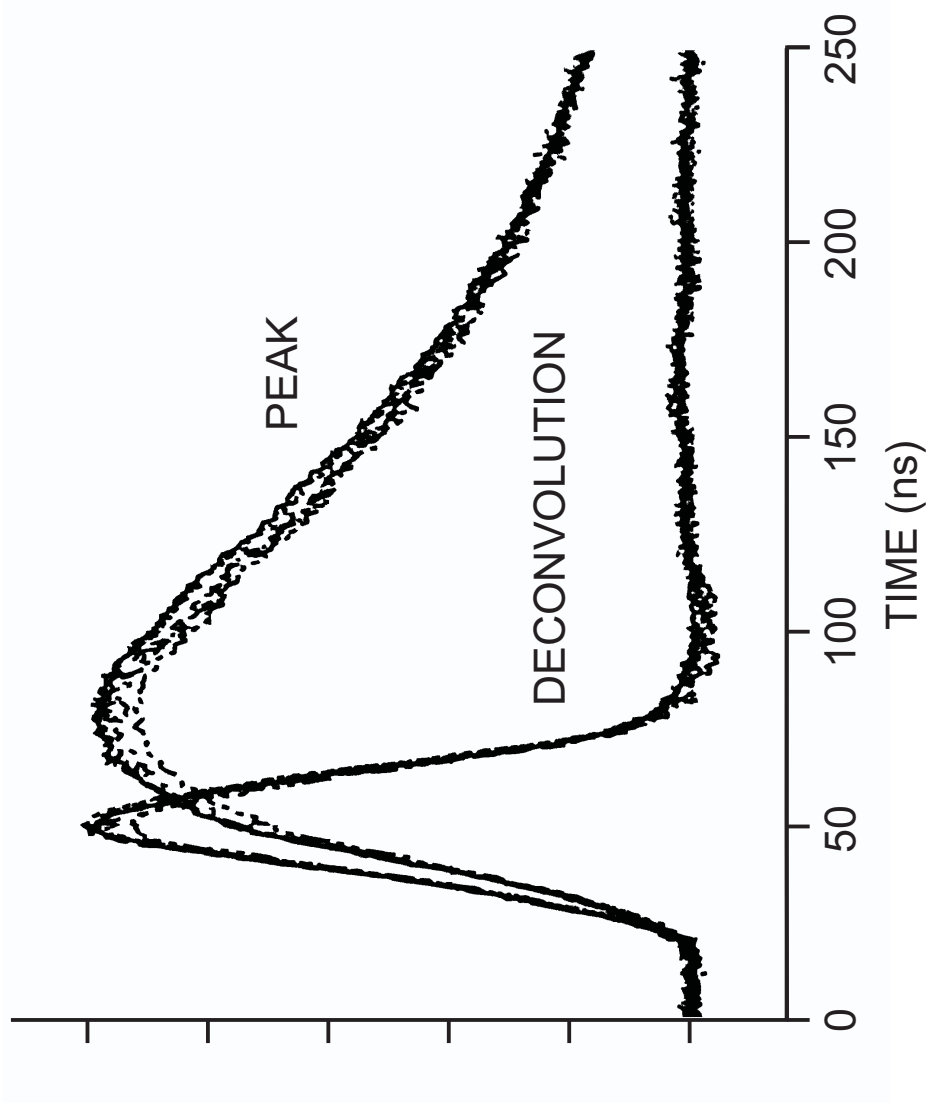

Fig. 8.27.

Figure 8.28

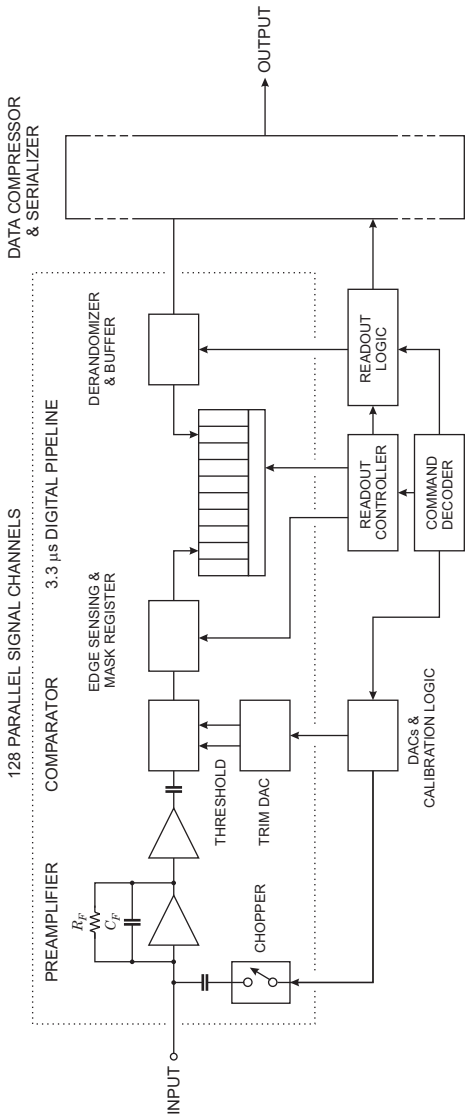

Fig. 8.28.

Figure 8.29

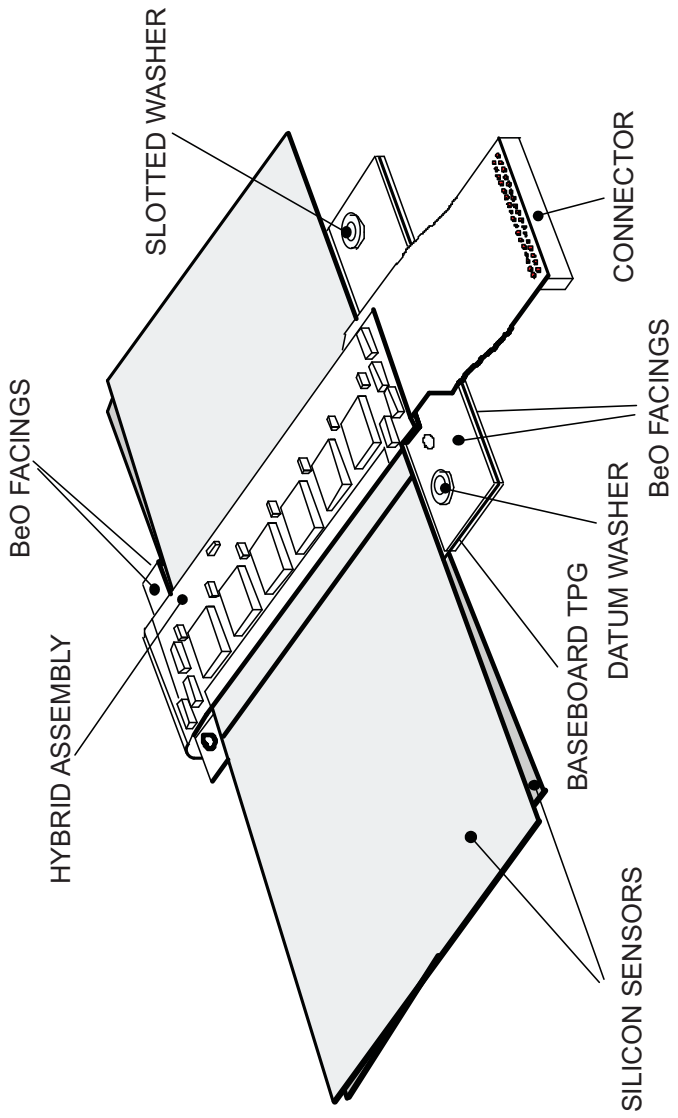

Fig. 8.29.

Figure 8.30

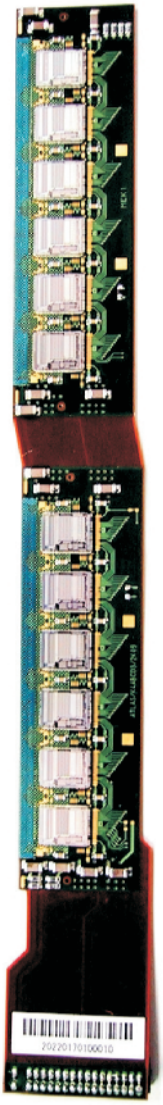

Fig. 8.30.

Figure 8.31

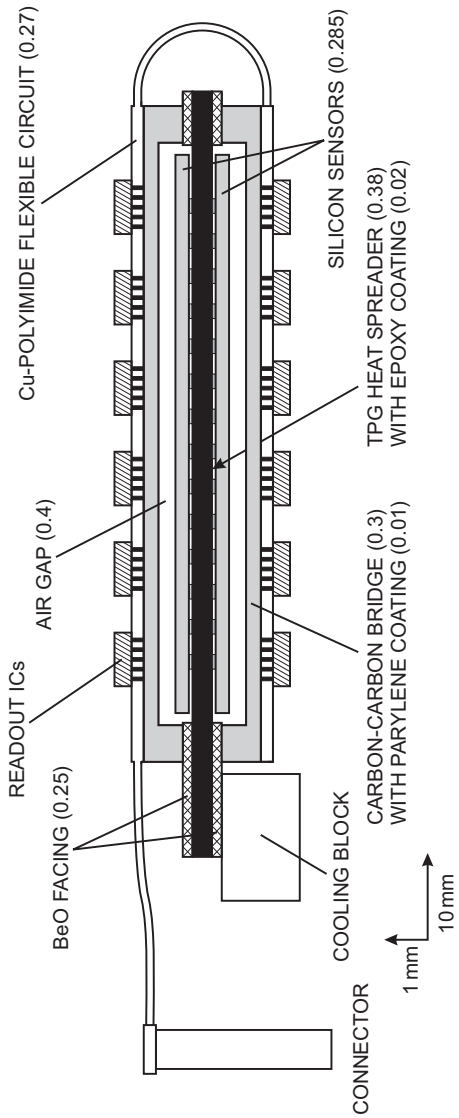

Fig. 8.31.

Figure 8.32

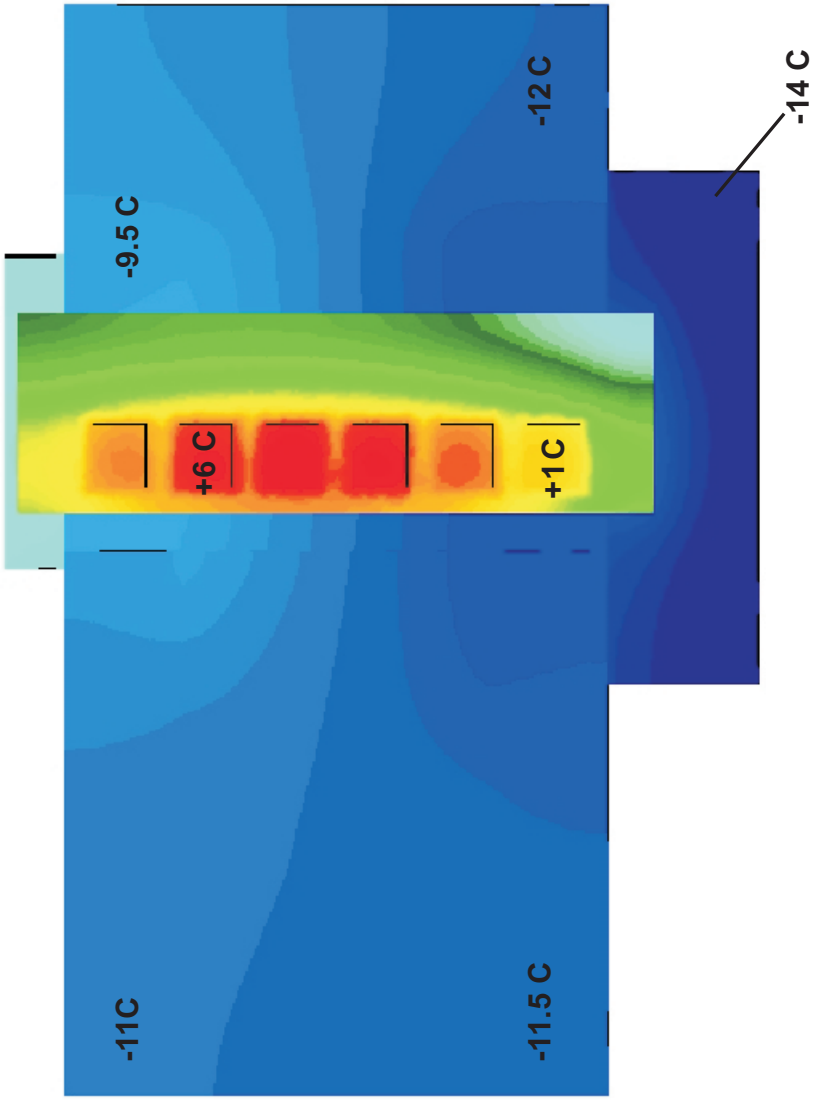

Fig. 8.32.

Figure 8.33

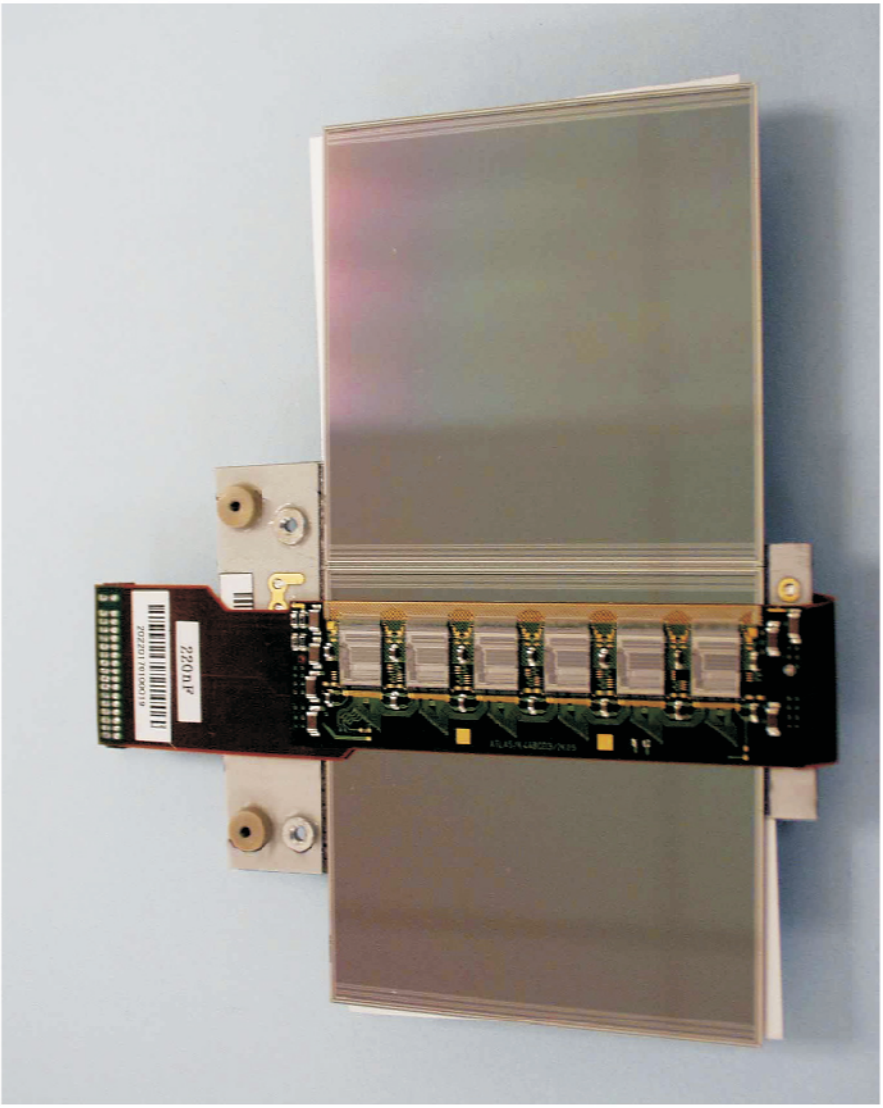

Fig. 8.33.

Figure 8.34

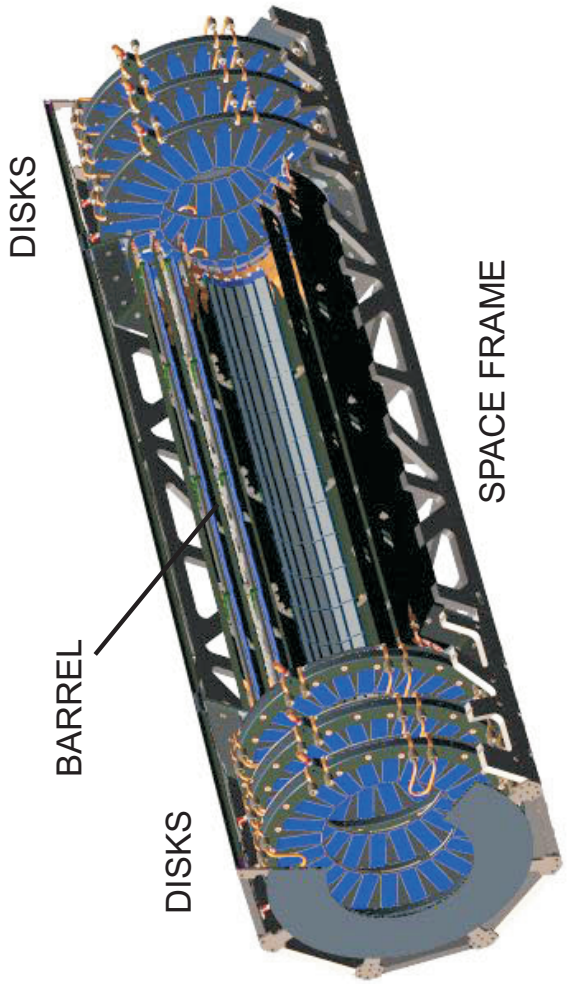

Fig. 8.34.

Figure 8.35

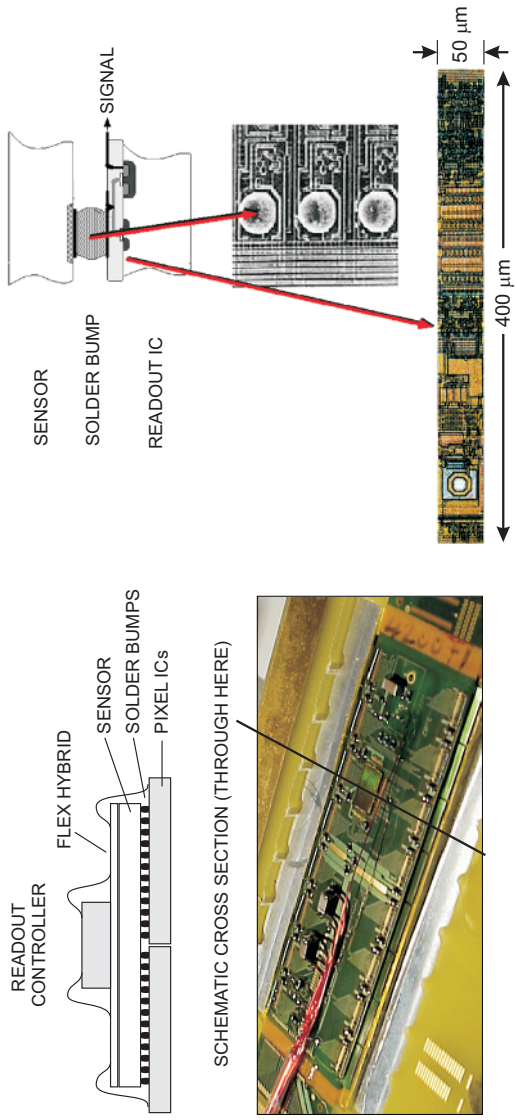

Fig. 8.35.

Figure 8.36

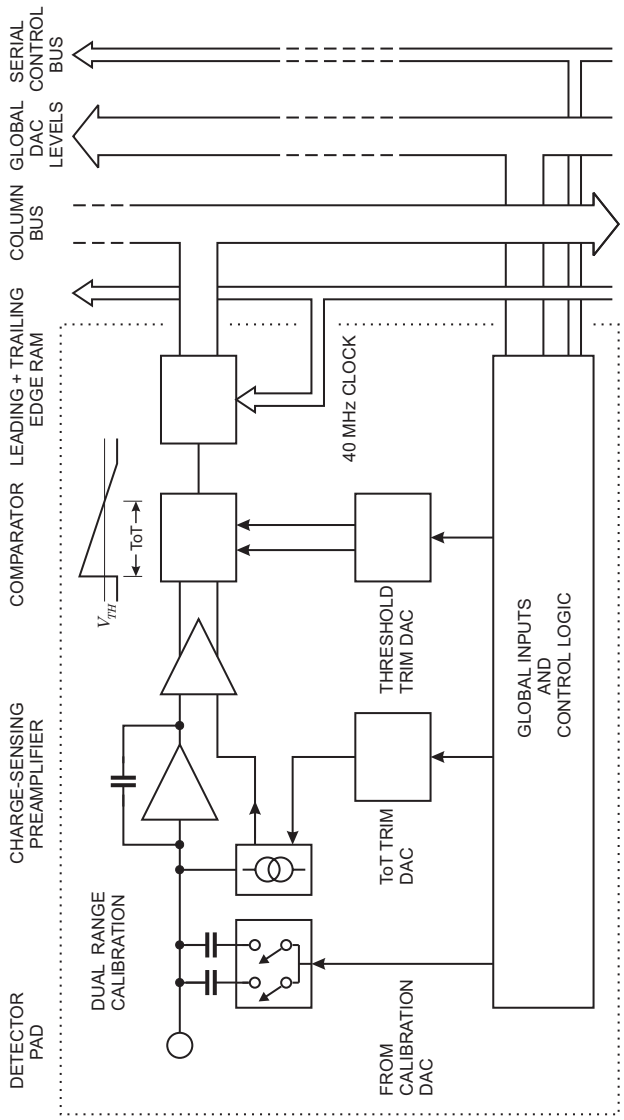

Fig. 8.36.

Figure 8.37

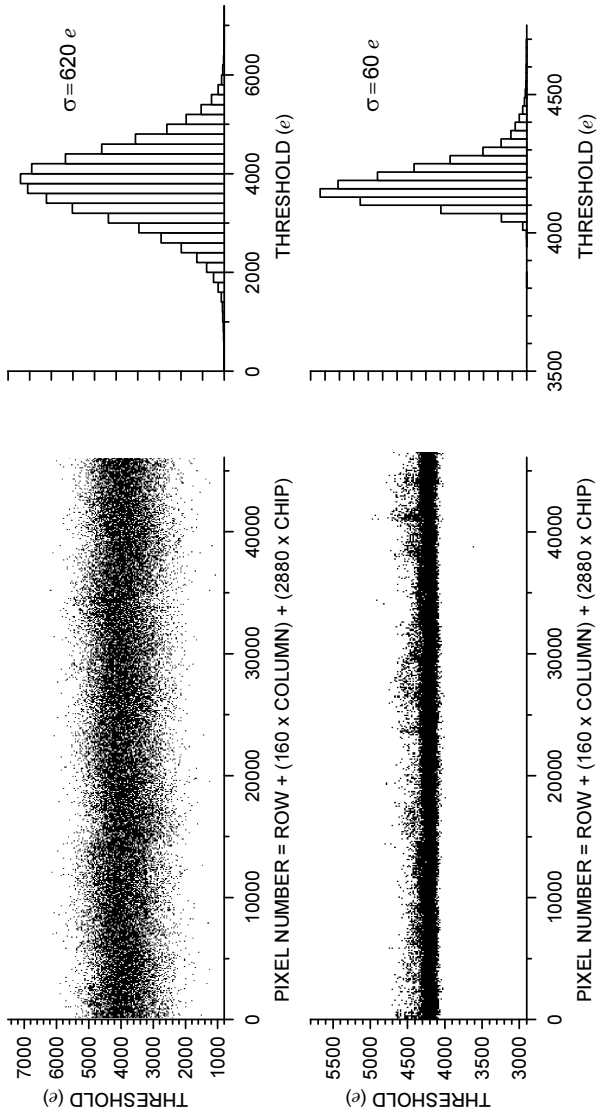

Fig. 8.37.

Figure 8.38

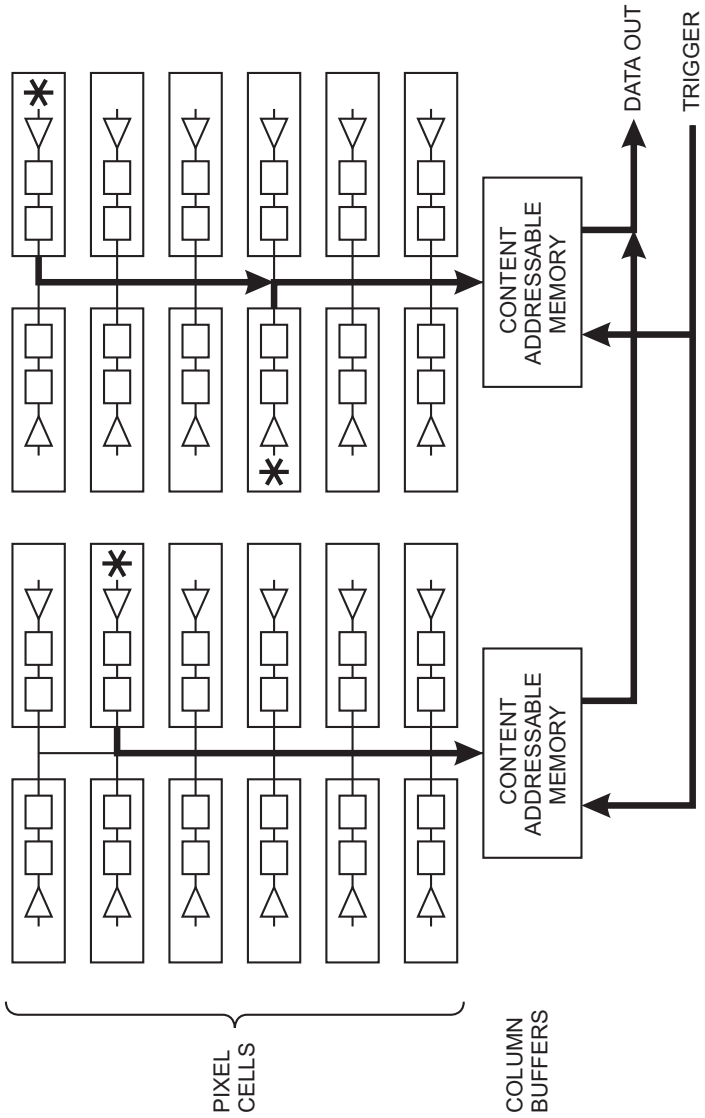

Fig. 8.38.

Figure 8.39

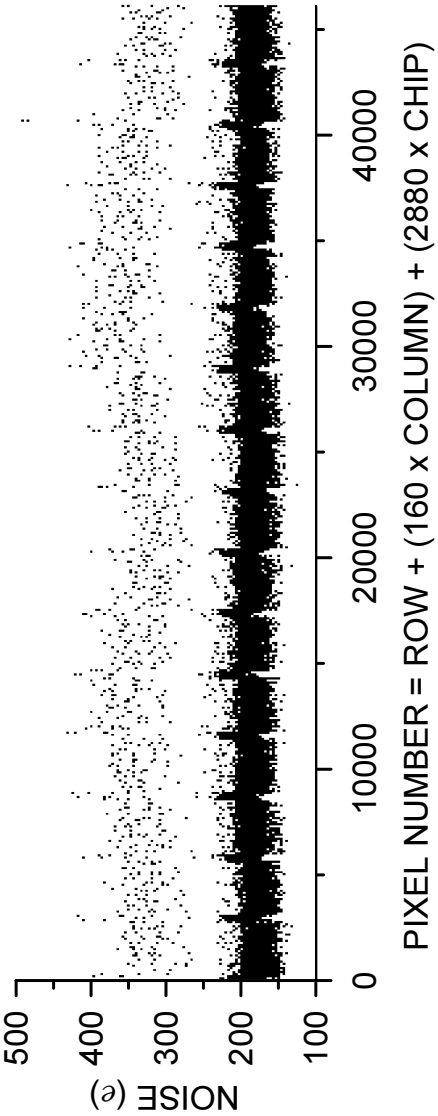

Fig. 8.39.

Figure 8.40

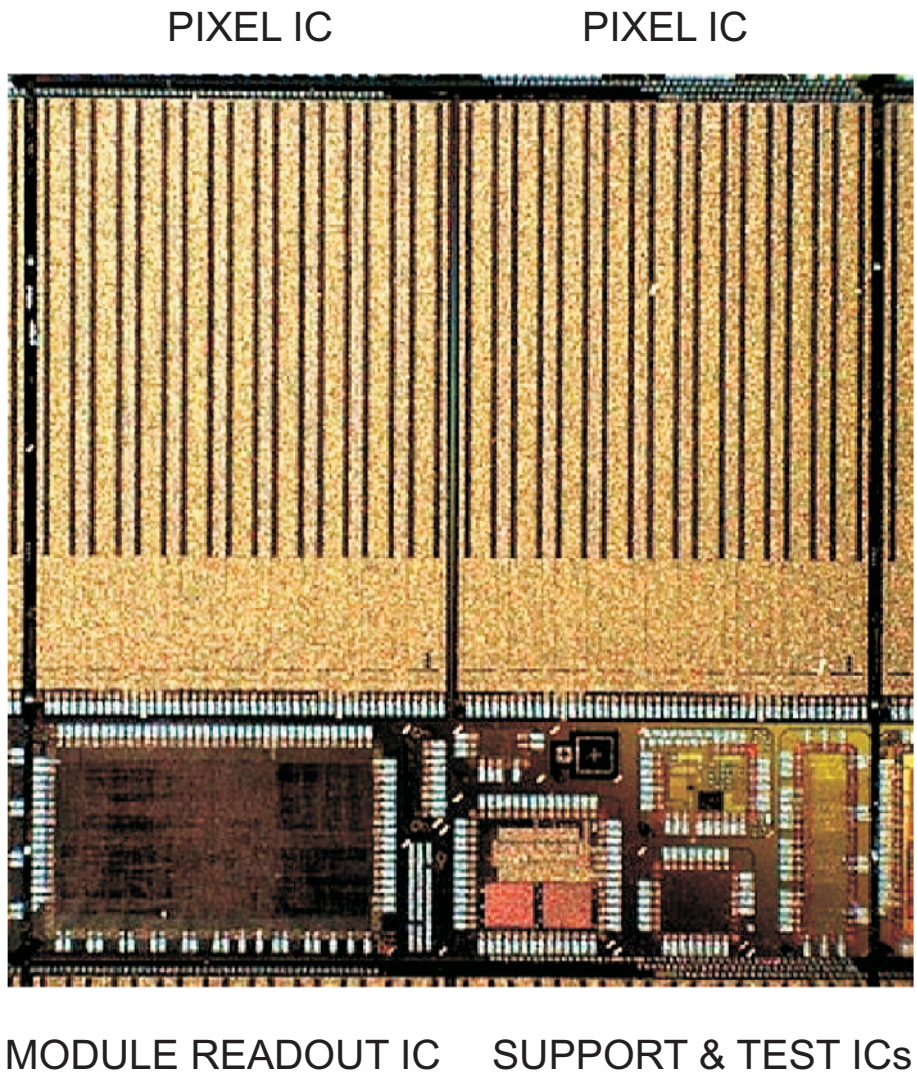

Fig. 8.40.

Figure 8.41

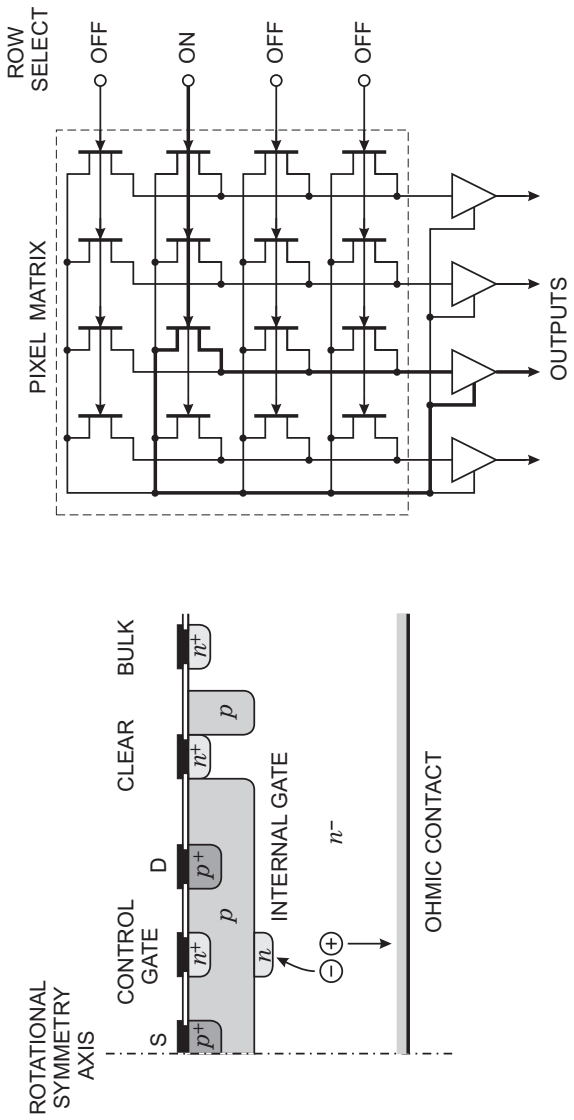

Fig. 8.41.

Figure 8.42

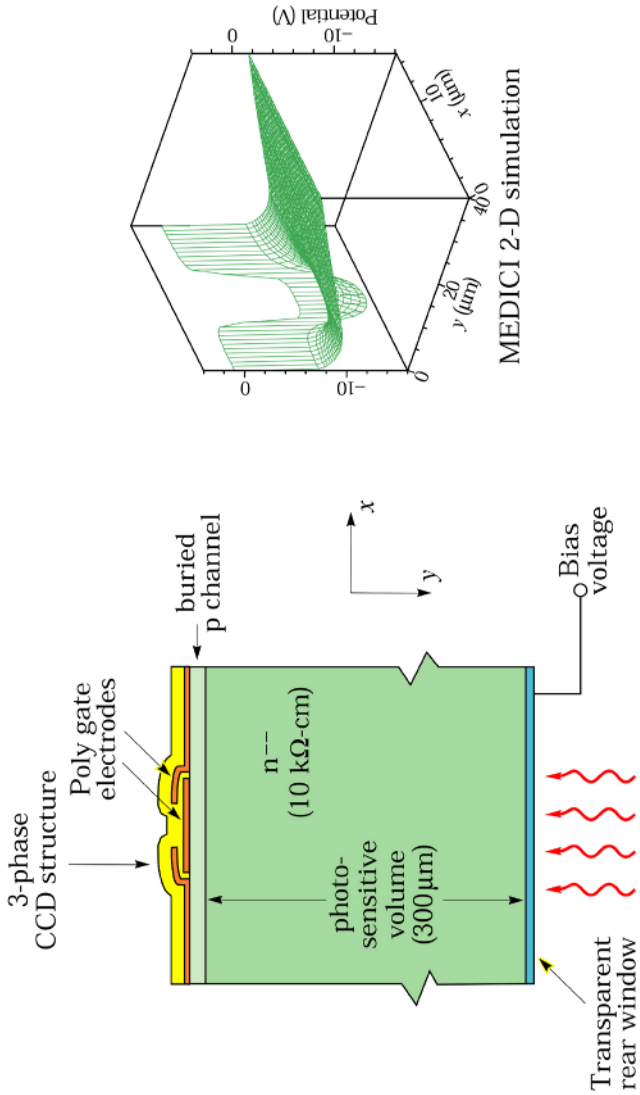

Fig. 8.42.

Figure 8.43

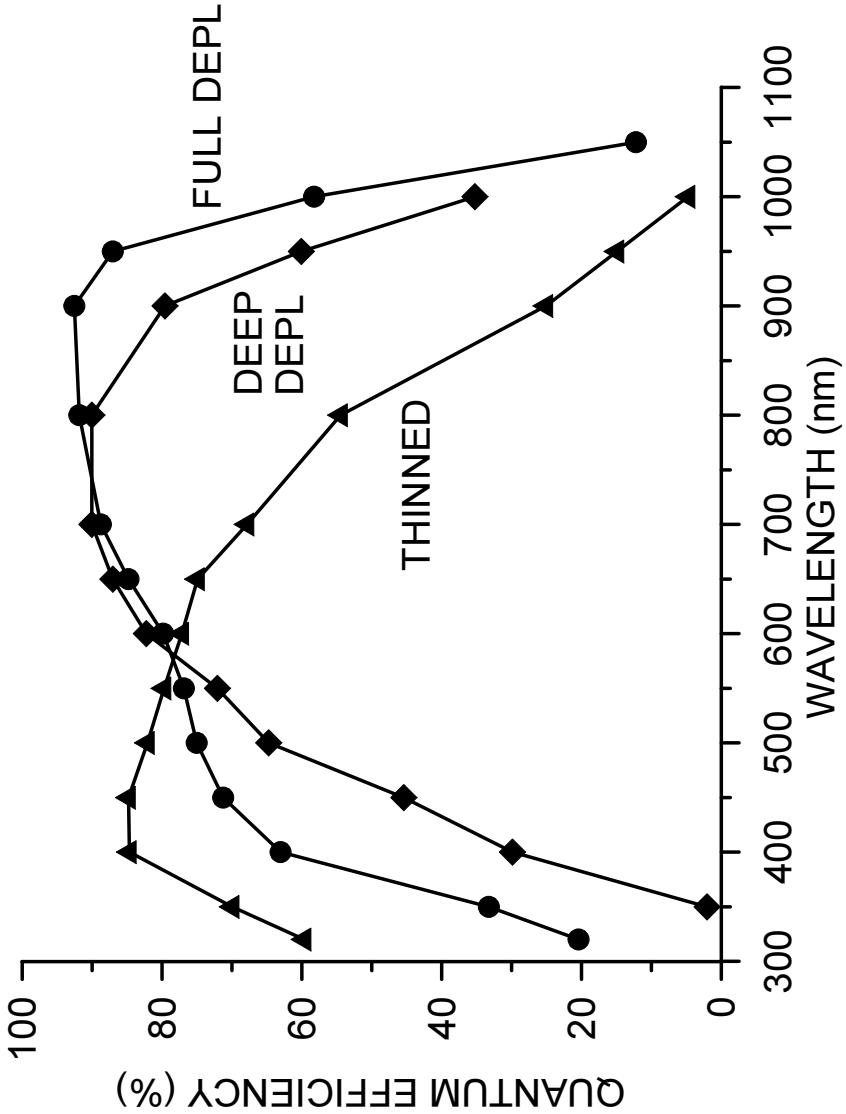

Fig. 8.43.

Figure 8.44

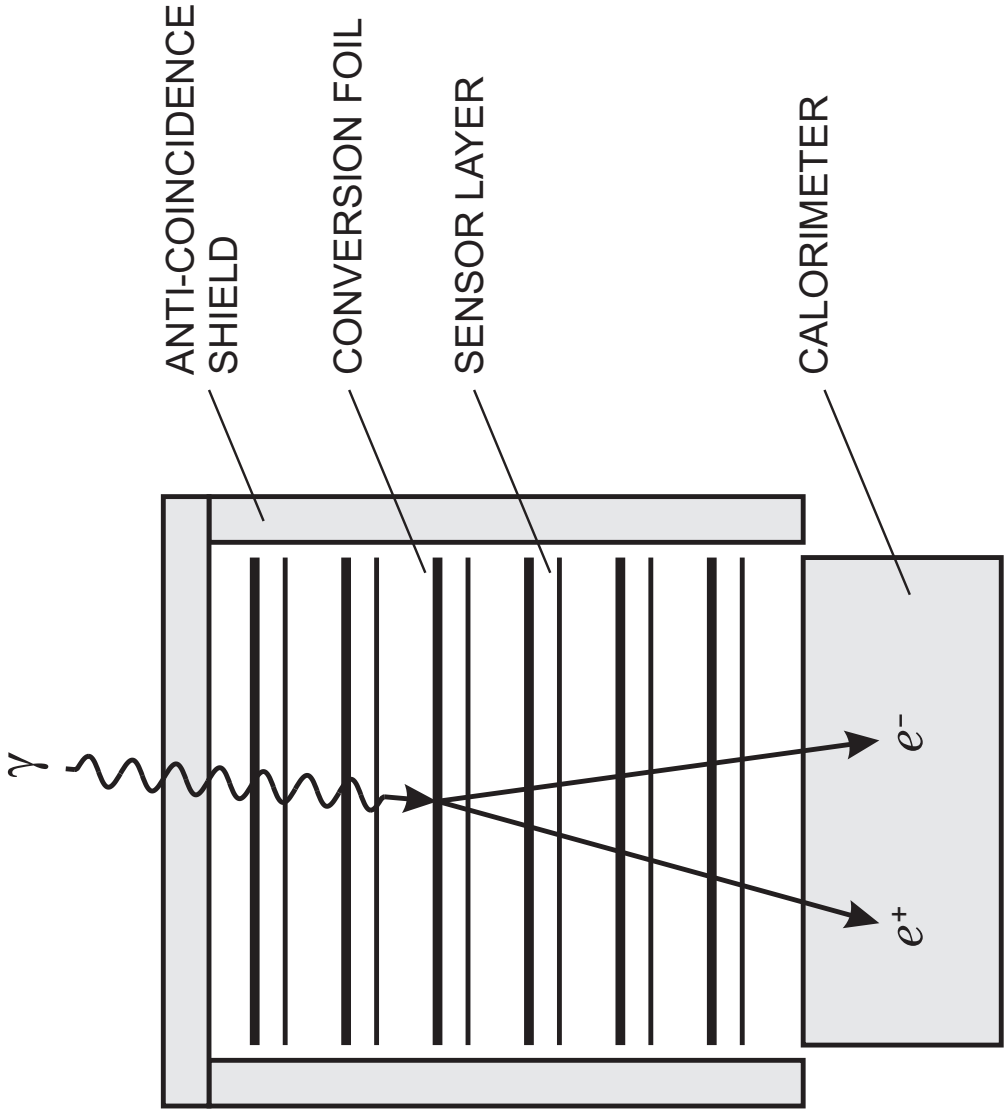

Fig. 8.44.

Figure 8.45

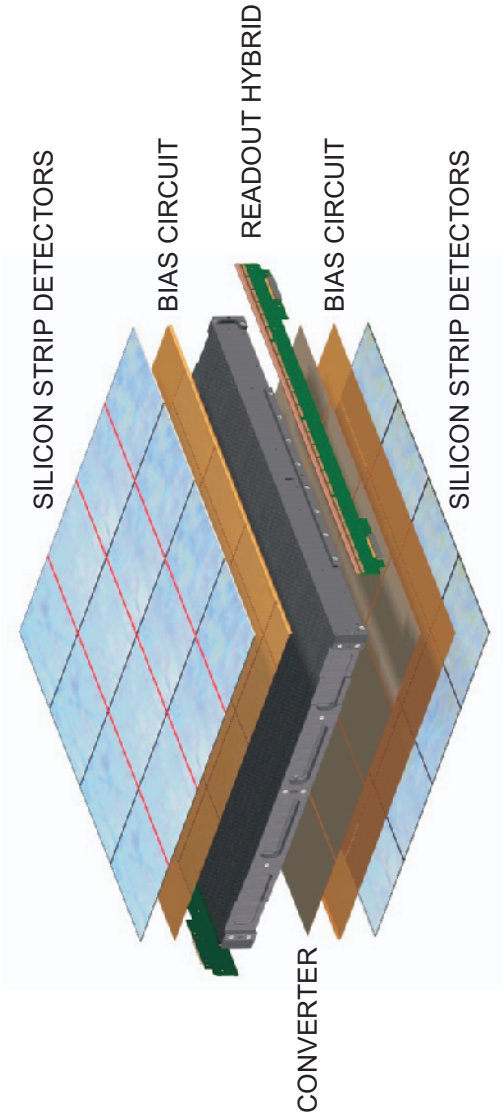

Fig. 8.45.

Figure 8.46

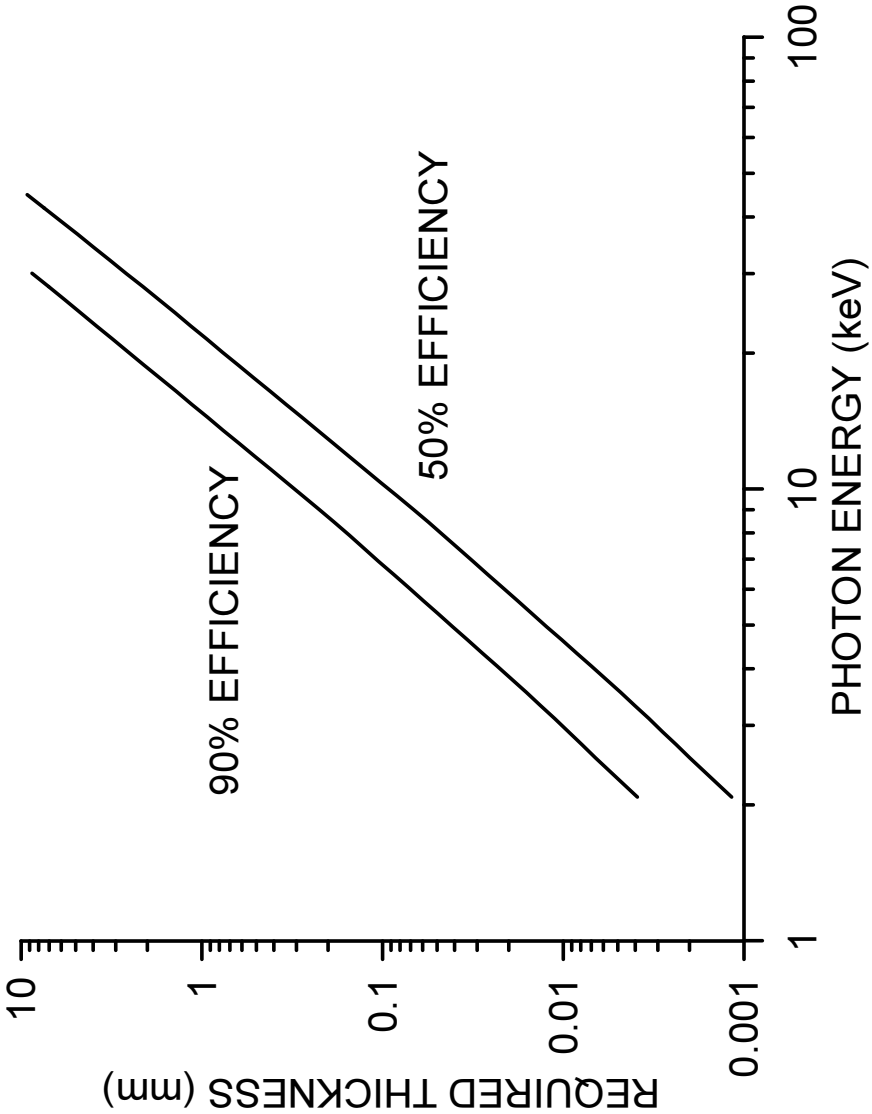

Fig. 8.46.

Figure 8.47

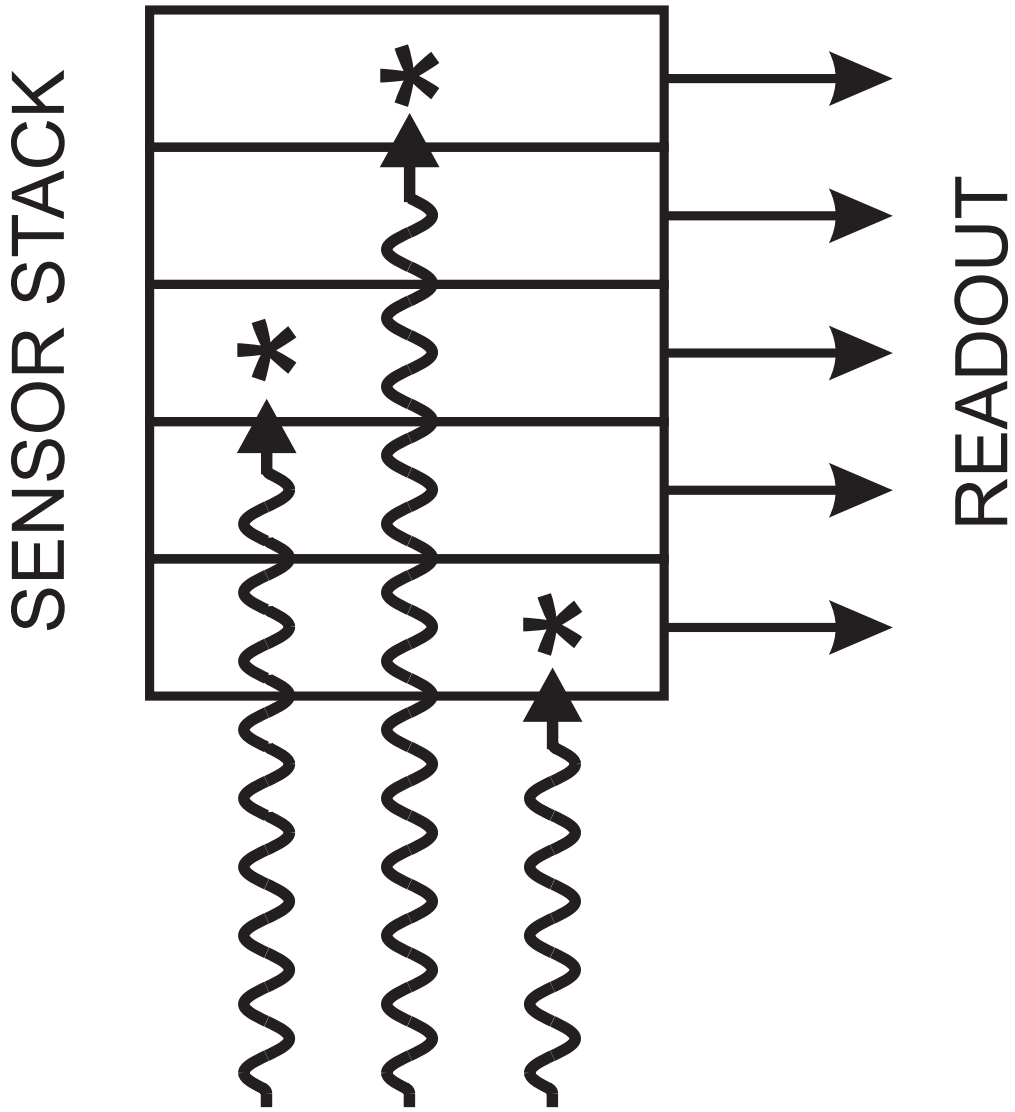

Fig. 8.47.

Figure 8.48

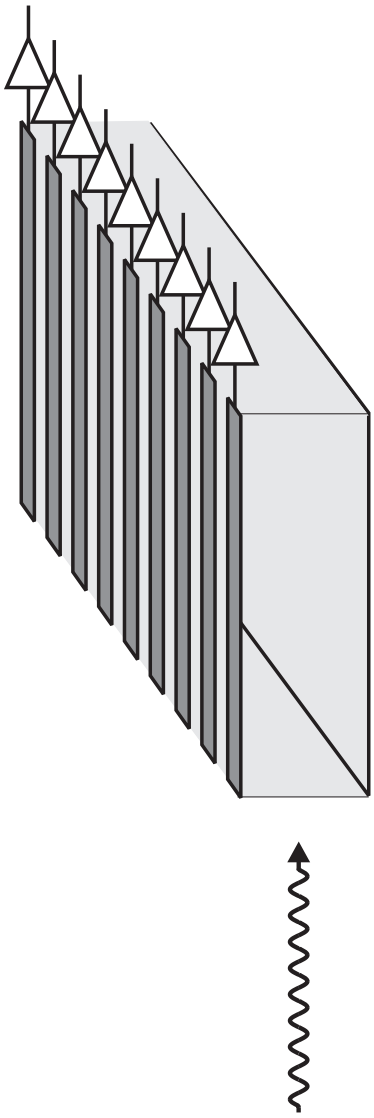

Fig. 8.48.

Figure 8.49

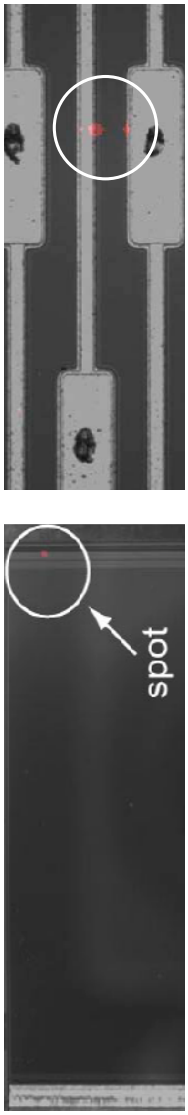

Fig. 8.49.