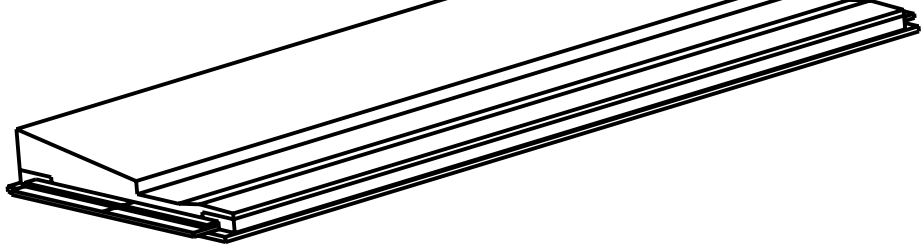

SECTION A-A
SCALE 5.000

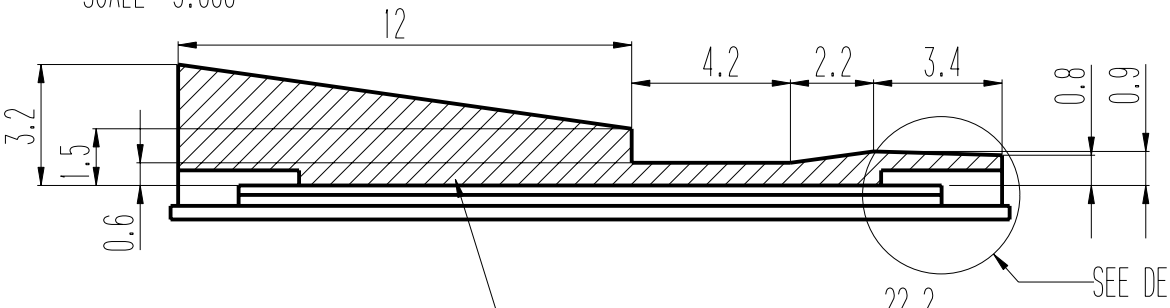

DETAIL 1
SCALE 10.000

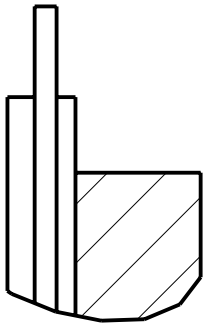

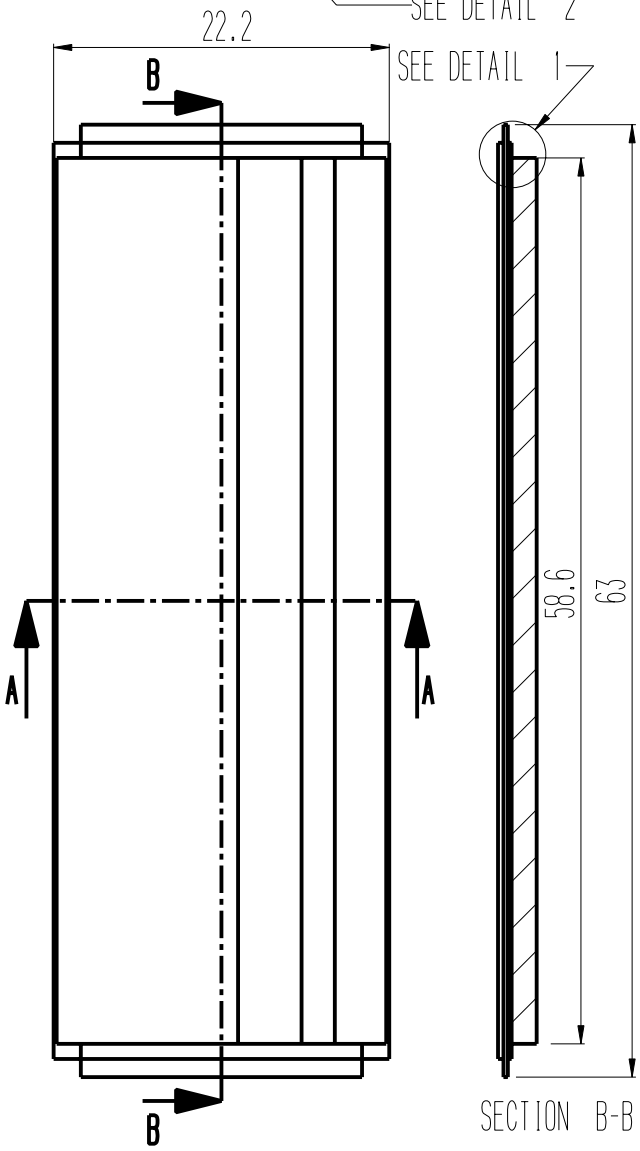

SECTION B-B

DETAIL 2
SCALE 10.000

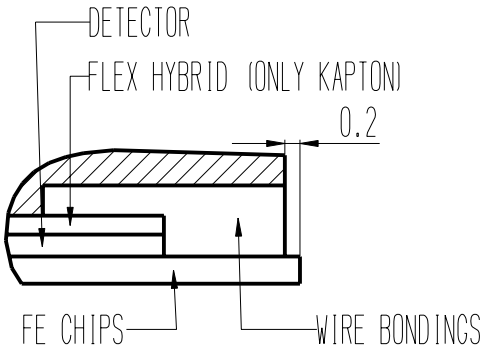

(component envelope =length x width x depth

FE chips	=	60.6 x 22.2 x 0.36
detector	=	63 x 18.6 x 0.29
flex-hybrid (kapton only)	=	60.6 x 18.6 x 0.25
wire bonding encapsulation	=	*58.6 x 3.2** x 0.94 **

* =57.6(wire bonding extent.)+0.5 each end

** for reference only

Designed	Checked	Date	Rev.	Degree of accuracy UNI 5307-63	Scale	CDD/EDMSn°
Puppo R.	Ing.Cuneo S.	13/1/2000	1		2.000	

INFN
ISTITUTO NAZIONALE DI FISICA NUCLEARE
SEZIONE DI GENOVA
Via Dodecaneso, 33 - 16143 Genova

Description FLEX HYBRID MODULE ENVELOPE AND ALLOWED VOLUME

Experiment	Group	Drawing N°
ATLAS	1	ATLAY0001