DWG. NO.	SIZE	REV.	SH.
21F5254	-		1

DESCRIPTION	MATERIAL	MAT. LOCATION

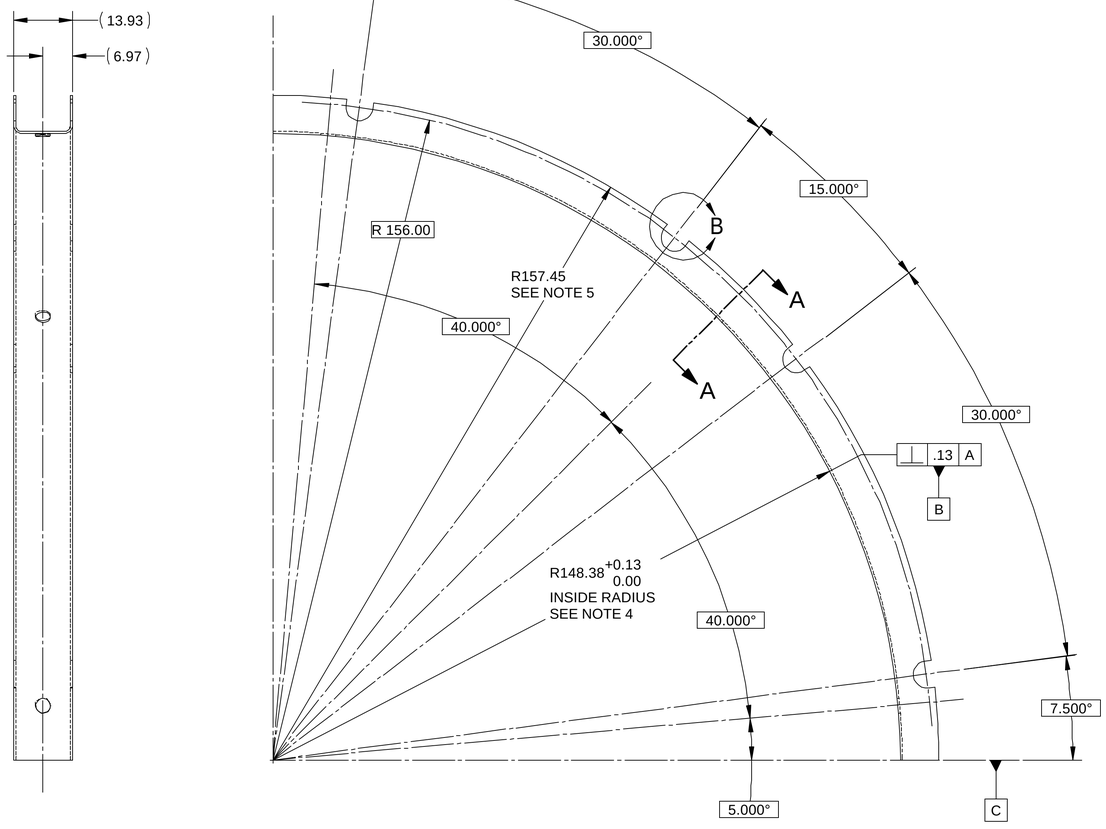

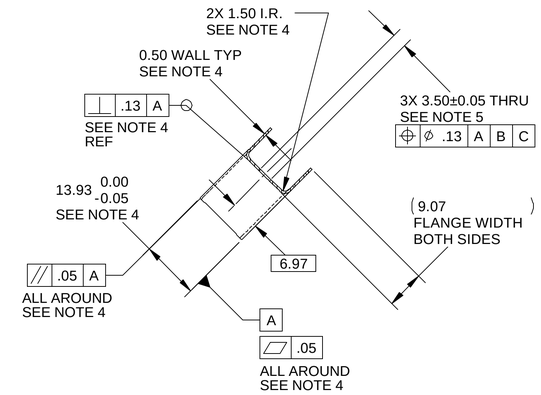

SECTION A-A
SCALE 1.5 : 1

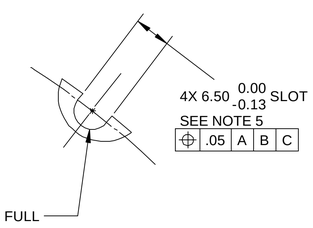

DETAIL B
SCALE 2 : 1

MATL: YSH50 WOVEN CLOTH (140gm/ sq meter)
4 PLY (0/45/-S); 58-60 % FIBER BY VOLUME;
IMPREGNATED WITH YSH RS-3 RESIN
BY COMPOSITE FABRICATOR

NOTES: UNLESS OTHERWISE SPECIFIED

1. DIMENSIONS IN MILLIMETERS
2. DIMENSIONS AND TOLERANCING PER ASME Y14.5M-1994
3. OIL BASED LUBRICANTS PROHIBITED, WATER BASED LUBRICANTS ACCEPTABLE
4. DIMENSION AND TOLERANCE BASED UPON MOLD LAYUP (NOT A MACHINED SURFACE)
5. USE OF DIAMOND OR CARBIDE TOOLS IS REQUIRED TO REDUCE EDGE CHIPPING OR FRAYING

THIRD ANGLE PROJECTION

REV	DWG	CHK	ZONE	DATE	CHANGES

UNLESS OTHERWISE SPECIFIED
TOLERANCES: X.X ± 0.5 FRAC. ± 1/64; X.XX ± 0.25 ANGLES ± 30'; X.XXX ± 0.013 FINISH 1.6
DO NOT SCALE PRINT
THREADS ARE CLASS 2
CHAMFER ENDS OF ALL SCREW THREADS 30°
CUT ROUND, 1.5 THREAD RELIEF ON MACHINED THREADS
BREAK EDGES .016 MAX. ON MACHINED WORK
REMOVE BURRS, WELD SPLATTER & LOOSE SCALE
IN ACCORDANCE WITH ASME Y14.5m & B46.1

SHOP ORDERS
ACCT NO. | NO. REQD | DATE ISSD
DEL TO | DATE REQD
SURFACE TREATMENT
IDEN METHOD | TAG
PROJECT NUMBER: ATL-IP-ED-0074
PROJECT NAME: US ATLAS SILICON SUBSYSTEM
DWG BY: W. K. MILLER | DATE 5/9/2001
CHK BY: BILL WILDS | DATE 6/1/2001
APR BY: E ANDERSSEN | DATE ????
SER NO.

ERNEST ORLANDO LAWRENCE
BERKELEY NATIONAL LABORATORY
UNIVERSITY OF CALIFORNIA - BERKELEY #

ATLAS PIXEL DETECTOR
SECTOR MOUNTING RING
INNER C-CHANNEL

MICROFILMED:	DWG. TYPE	SHOWN ON	SCALE: 1:0.66	DO NOT SCALE PRINTS
	PART	21F522	SHEET 1 OF 1	
PATENT CLEAR:	DESIGN ACCT. NO.	CATEGORY CIDE	DWG. NO.	SIZE	REV.
	P1AP-11	AP6250	21F5254		-