DWG. NO.	SIZE	REV.	SH.
nnXnnn4		1	1

ITEM	PART NO	REQD	DESCRIPTION	MATERIAL

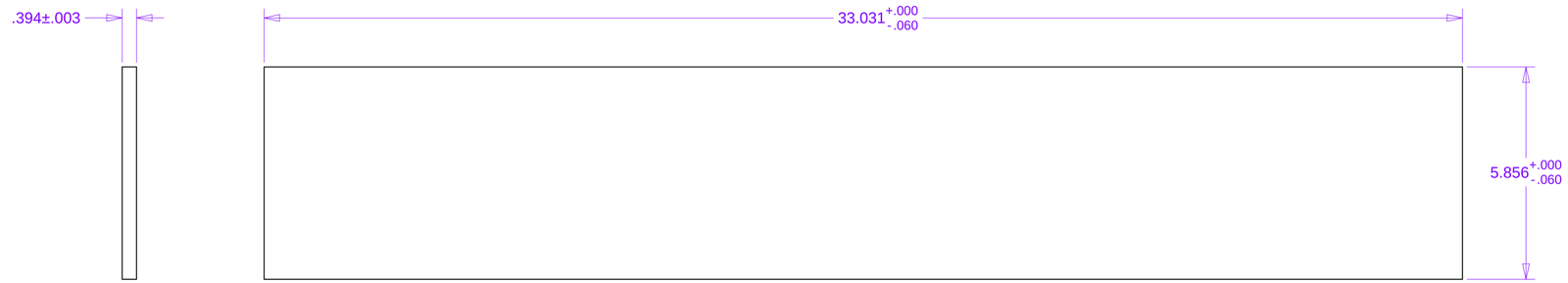

CENTRAL FRAME PANEL - 10 req'd

MATL: ULTRACOR Inc. UCF-83-1/4-3.0

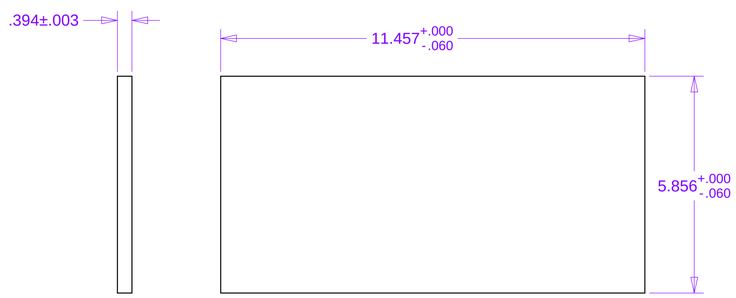

END FRAME PANEL - 20 req'd

MATL: ULTRACOR Inc. UCF-83-1/4-3.0

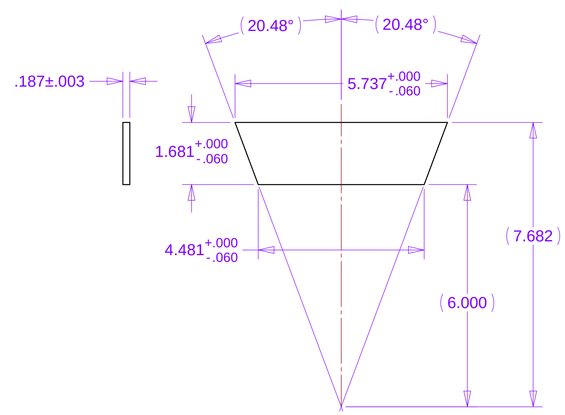

END CONE PANEL - 20 req'd

MATL: ULTRACOR Inc. UCF-83-1/4-3.0

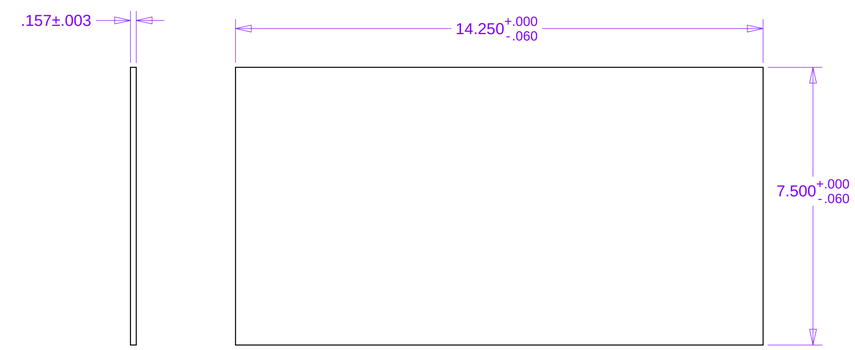

END PLATE - 6 req'd

MATL: ULTRACOR Inc. UCF-83-1/4-3.0

NOTES: UNLESS OTHER WISE SPECIFIED

1. ALL DIMENSIONS IN INCHES
2. DIMENSIONS AND TOLERANCING PER ASME Y14.5M-1994

THIRD ANGLE PROJECTION

REV	DWG	CHK	ZONE	DATE	CHANGES

UNLESS OTHERWISE SPECIFIED

TOLERANCES		
	X.X ± 0.02	FRAC. ± 1/64
	X.XX ± 0.01	ANGLES ± 30'
	X.XXX ± 0.001	FINISH 1.6

DO NOT SCALE PRINT

THREADS ARE CLASS 2

CHAMFER ENDS OF ALL SCREW THREADS 30°

CUT ROUND, 1.5 THREAD RELIEF ON MACHINED THREADS

BREAK EDGES .016 MAX. ON MACHINED WORK

REMOVE BURRS, WELD SPLATTER & LOOSE SCALE

IN ACCORDANCE WITH ASME Y14.5m & B46.1

SHOP ORDERS

ACCT NO.		NO. REQD	
DEL TO			
SURFACE TREATMENT			
IDEN METHOD	TAG		
PROJECT NUMBER	ATL-IP-ED-XXXX		
PROJECT NAME	US ATLAS SILICONE SUBSYSTEM		
DWG BY	Roger Smith	DATE	7/8/2002
CHK BY	W.O. Miller	DATE	7/8/2002
APR BY	W.O. Miller	DATE	7/8/2002

SER NO.

DATE ISSD

DATE REQD

US ATLAS SILICON SUBSYSTEM LOGO

ERNEST ORLANDO LAWRENCE
BERKELEY NATIONAL LABORATORY
UNIVERSITY OF CALIFORNIA - BERKELEY

ATLAS PIXEL DETECTOR
FRAME PANEL
CORE BLANKS

MICROFILMED:	DWG. TYPE	SHOWN ON	SCALE: 1:2	DO NOT SCALE PRINTS
	ASSEM	nnXnnn	SHEET 1 OF 1	
PATENT CLEAR:	DESIGN ACCT. NO.	CATEGORY CIDE	DWG. NO.	SIZE / REV.
	P1AP-11	AP6200	21F643	1