DWG. NO.	SIZE	REV.	SH.
21F754 4		-	1

DESCRIPTION	MATERIAL	MAT. LOCATION

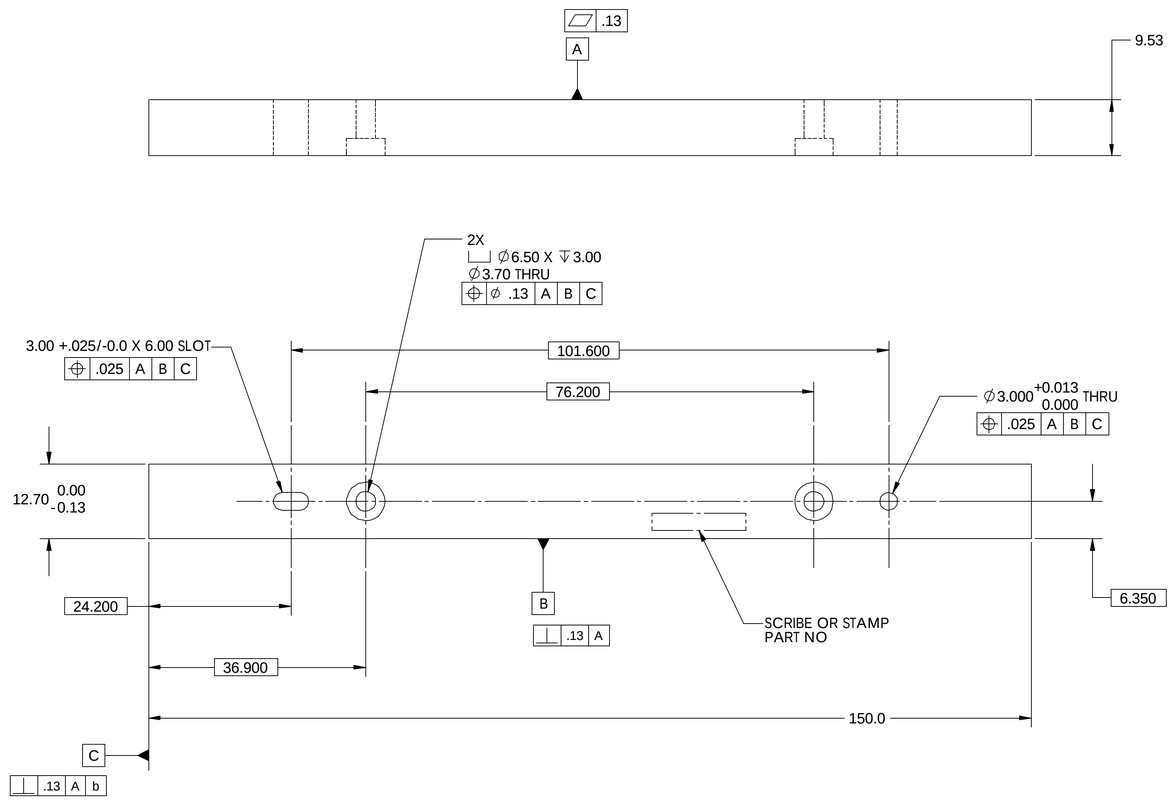

MATL: 6061-T6 ALUM

NOTES: UNLESS OTHERWISE SPECIFIED

1. ALL DIMENSIONS IN MILLIMETERS
2. DIMENSIONS AND TOLERANCING PER ASME Y14.5M-1994
3. SURFACE TEXTURE PER ANI/ASME B 46.1-1985
4. REMOVE ALL BURRS AND BREAK SHARP EDGES TO A MAXIMUM OF .38
5. ALL INSIDE CORNERS TO BE .38 RADIUS MAX
6. COUNTERSINK 82 DEGREES ALL TAPPED HOLES TO MAJOR DIAMETER
7. COUNTERSINK 82 DEGREES APPROXIMATELY .38 DEEP ALL DRILLED HOLES
8. PARTS TO BE THOROUGHLY CLEANED TO REMOVE ALL OIL, GREASE, DIRT AND CHIPS

REV	DWG	CHK	ZONE	DATE	CHANGES

UNLESS OTHERWISE SPECIFIED

TOLERANCES		
	X.X ± 0.5	FRAC. ± 1/64
	X.XX ± 0.25	ANGLES ± 30'
	X.XXX ± 0.013	FINISH 1.6

DO NOT SCALE PRINT

THREADS ARE CLASS 2

CHAMFER ENDS OF ALL SCREW THREADS 30°

CUT ROUND, 1.5 THREAD RELIEF ON MACHINED THREADS

BREAK EDGES .016 MAX. ON MACHINED WORK

REMOVE BURRS, WELD SPLATTER & LOOSE SCALE

IN ACCORDANCE WITH ASME Y14.5m & B46.1

SHOP ORDERS

ACCT NO.	NO. REQD	SER NO.	
DEL TO		DATE ISSD	
		DATE REQD	
SURFACE TREATMENT			
IDEN METHOD	TAG		
PROJECT NUMBER	ATL-IP-ED-XXXX		US ATLAS SILICON SUBSYSTEM (ASSY)
PROJECT NAME	US ATLAS SILICON SUBSYSTEM		
DWG BY	W. K. MILLER	DATE	4/16/2002
CHK BY	BILL WILDS	DATE	4/16/2002
APR BY	E ANDERSSEN	DATE	4/16/2002

ERNEST ORLANDO LAWRENCE
BERKELEY NATIONAL LABORATORY
UNIVERSITY OF CALIFORNIA - BERKELEY

ATLAS PIXEL DETECTOR
ENDCONE PANEL
BONDING FIXTURE CAVITY PLATE

MICROFILMED:	DWG. TYPE	SHOWN ON	SCALE:	DO NOT SCALE PRINTS
	PART	21F750	2:1	
			SHEET 1 OF 1	
PATENT CLEAR:	DESIGN ACCT. NO.	CATEGORY CODE	DWG. NO.	SIZE / REV.
	P1AP-11	AP6250	21F754 4	-