DWG. NO.	SIZE	REV.	SH.
21F713	4	-	1

ITEM	PART NO.	REQD	DESCRIPTION	MATERIAL
4	21F713-3	1	MOLD ALIGNMENT ROD	STEEL
3	21F713-5	1	VERTEX JOINING PIN MANDREL	STEEL
2	21715-1	1	VERTEX JOINT INSERT MANDREL	STEEL
1	21F713	2	VERTEX TUBE INSERT MOLD CAVITY	STEEL

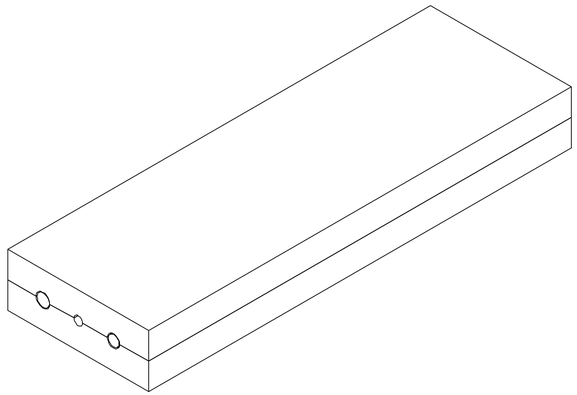

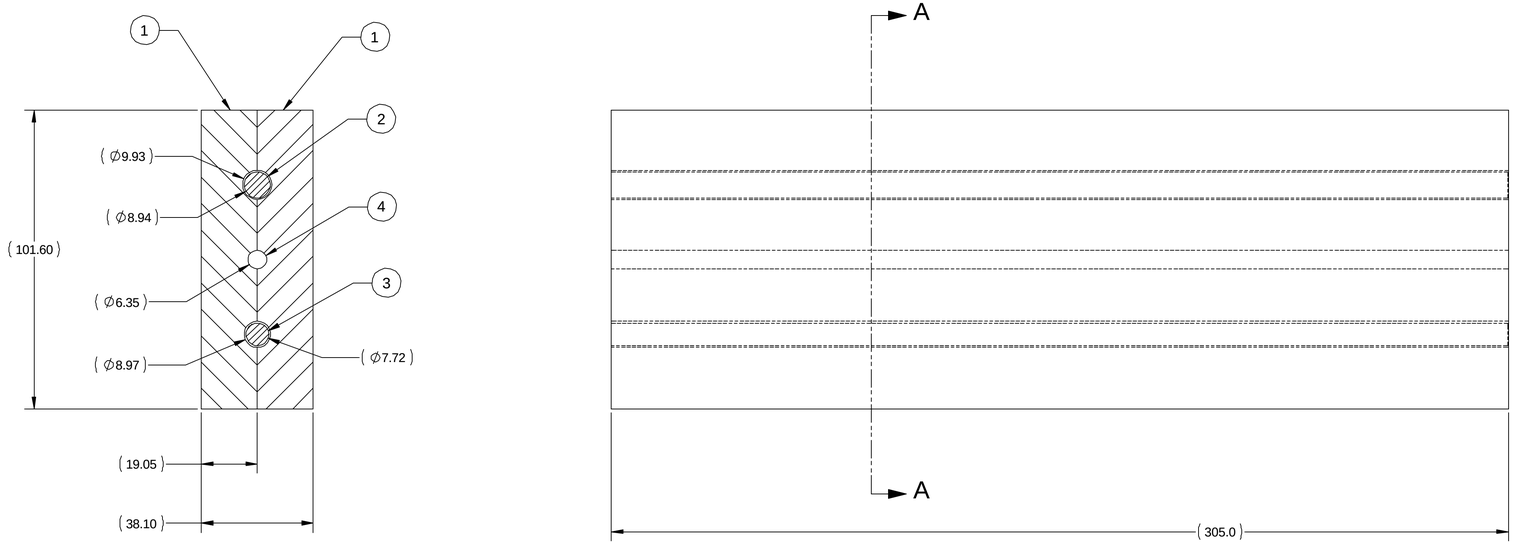

SECTION A-A
SCALE 1 : 1

NOTES: UNLESS OTHERWISE SPECIFIED

1. DIMENSIONS IN MILLIMETERS
2. MOLD USED TO FORM VERTEX JOINT INSERT AND VERTEX JOINING PIN (PARTS 21F677 AND 21F658)
3. SEE PART DRAWINGS FOR MATERIAL SPECIFICATIONS

REV	DWG	CHK	ZONE	DATE	CHANGES

UNLESS OTHERWISE SPECIFIED

TOLERANCES		
	X.X ± 0.5	FRAC. ± 1/64
	X.XX ± 0.25	ANGLES ± 30'
	X.XXX ± 0.013	FINISH 1.6

DO NOT SCALE PRINT

THREADS ARE CLASS 2
CHAMFER ENDS OF ALL SCREW THREADS 30°
CUT ROUND, 1.5 THREAD RELIEF ON MACHINED THREADS
BREAK EDGES .016 MAX. ON MACHINED WORK
REMOVE BURRS, WELD SPLATTER & LOOSE SCALE
IN ACCORDANCE WITH ASME Y14.5m & B46.1

SHOP ORDERS

ACCT NO.	NO. REQD	SER NO.	
DEL TO		DATE ISSD	
SURFACE TREATMENT		DATE REQD	
IDEN METHOD	TAG		
PROJECT NUMBER	ATL-IP-ED-XXXX		
PROJECT NAME	US ATLAS SILICON SUBSYSTEM		
DWG BY	W. K. MILLER	DATE	4/16/2002
CHK BY	BILL WILDS	DATE	4/16/2002
APR BY	E. ANDERSSEN	DATE	4/16/2002

ERNEST ORLANDO LAWRENCE
BERKELEY NATIONAL LABORATORY
UNIVERSITY OF CALIFORNIA - BERKELEY

ATLAS PIXEL DETECTOR
SPACEFRAME
VERTEX TUBE MOLD ASSEMBLY

MICROFILMED:	DWG. TYPE	SHOWN ON	SCALE:	DO NOT SCALE PRINTS
	ASSEM	N/A	1:1	
			SHEET 1 OF 1	
PATENT CLEAR:	DESIGN ACCT. NO.	CATEGORY CIDE	DWG. NO.	SIZE / REV.
	P1AP-11	AP6250	21F713	4 / -