DWG. NO.	SIZE	REV.	SH.
nnXnnn4		A	1

DESCRIPTION	MATERIAL	MAT. LOCATION

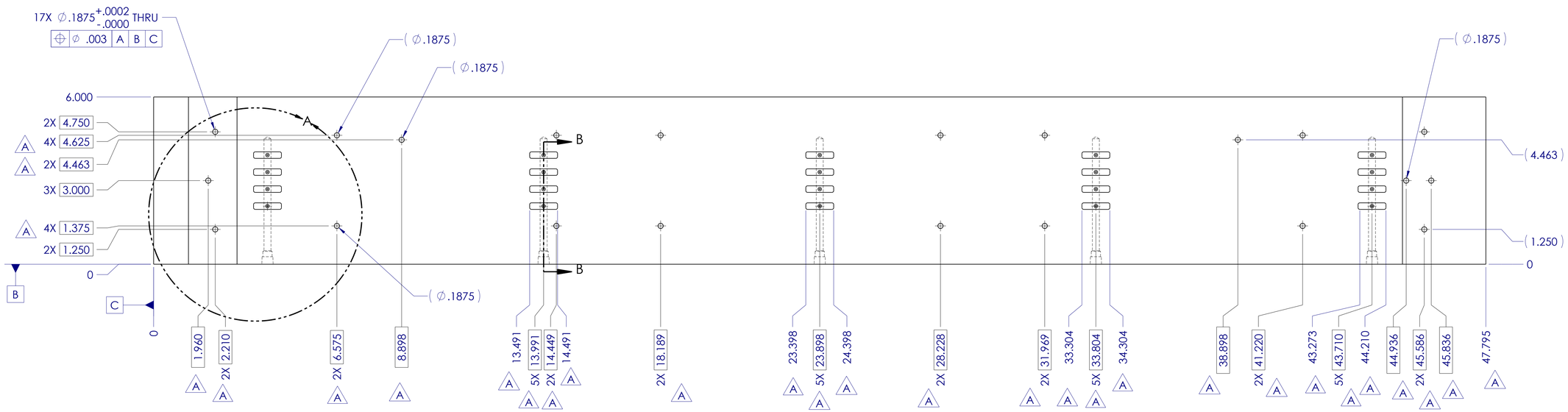

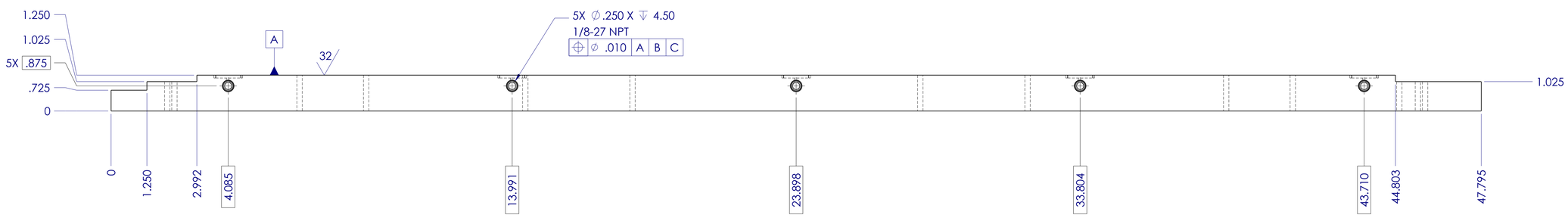

NOTES: UNLESS OTHERWISE SPECIFIED

1. MATL: MIC 6 ALUMINUM TOOLING PLATE

REV	DWG	CHK	ZONE	DATE	CHANGES
A				11-26-06	ADDED AND RE-LOCATED HOLES

UNLESS OTHERWISE SPECIFIED

TOLERANCES		
	X.X ± 0.1	FRAC. ± 1/64
	X.XX ± 0.01	ANGLES ± 30'
	X.XXX ± 0.005	FINISH 125

DO NOT SCALE PRINT

THREADS ARE CLASS 2

CHAMFER ENDS OF ALL SCREW THREADS 30 °

CUT ROUND, 1.5 THREAD RELIEF ON MACHINED THREADS

BREAK EDGES .016 MAX ON MACHINED WORK

REMOVE BURRS, WELD SPLATTER & LOOSE SCALE

IN ACCORDANCE WITH ASME Y14.5m & B46.1

SHOP ORDERS

ACCT NO.	NO. REQD	SER NO.	
DEL TO		DATE ISSD	
SURFACE TREATMENT		DATE REQD	
IDEN METHOD	TAG		
PROJECT NUMBER	ATL-IP-ED-XXXX	US ATLAS SILICON SUBSYSTEM LOGO	
PROJECT NAME	US ATLAS SILICONE SUBSYSTEM		
DWG BY	W. K. MILLER	DATE	9/23/2006
CHK BY	W. O. MILLER	DATE	9/23/2006
APR BY	APPROVED	DATE	-

ERNEST ORLANDO LAWRENCE
BERKELEY NATIONAL LABORATORY
UNIVERSITY OF CALIFORNIA - BERKELEY

1m STAVE
VACUUM BASE PLATE

MICROFILMED:	DWG. TYPE	SHOWN ON	SCALE: 1:2	DO NOT SCALE PRINTS
	PART	nnXnnn	SHEET 1 OF 2	

PATENT CLEAR:	DESIGN ACCT. NO.	CATEGORY CIDE	DWG. NO.	SIZE	REV.
	P1AP-11	AP6250	nnXnnn4		A

DWG. NO.	SIZE	REV.	SH.
nnXnnn4		A	2

DESCRIPTION	MATERIAL	MAT. LOCATION

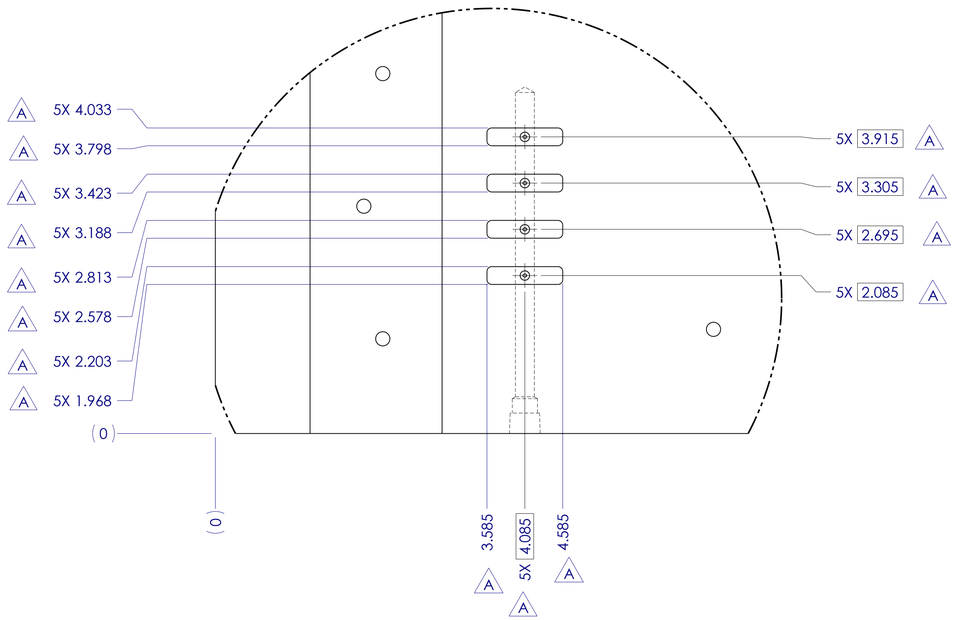

DETAIL A
SCALE 1 : 1

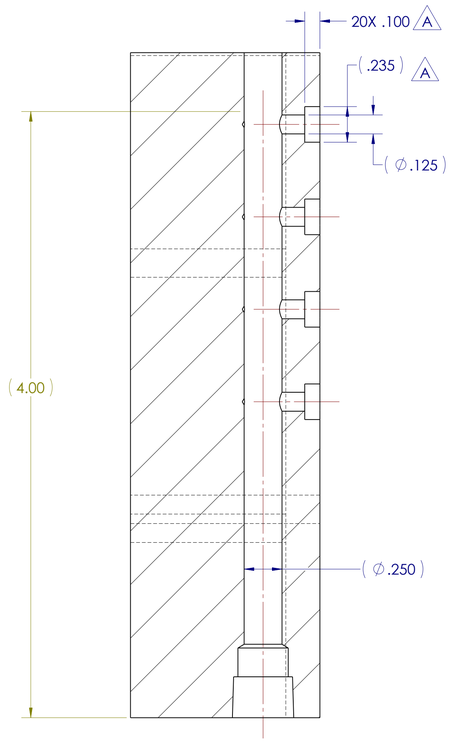

SECTION B-B
SCALE 2 : 1

REV	DWG	CHK	ZONE	DATE	CHANGES

UNLESS OTHERWISE SPECIFIED

TOLERANCES		
	X.X ± 0.1	FRAC. ± 1/64
	X.XX ± 0.01	ANGLES ± 30'
	X.XXX ± 0.005	FINISH 125

DO NOT SCALE PRINT

THREADS ARE CLASS 2

CHAMFER ENDS OF ALL SCREW THREADS 30 °

CUT ROUND, 1.5 THREAD RELIEF ON MACHINED THREADS

BREAK EDGES .016 MAX ON MACHINED WORK

REMOVE BURRS, WELD SPLATTER & LOOSE SCALE

IN ACCORDANCE WITH ASME Y14.5m & B46.1

SHOP ORDERS

ACCT NO.	NO. REQD	SER NO.	
DEL TO		DATE ISSD	
		DATE REQD	
SURFACE TREATMENT			
IDEN METHOD	TAG		
PROJECT NUMBER	ATL-IP-ED-XXXX		US ATLAS SILICON SUBSYSTEM LOGO
PROJECT NAME	US ATLAS SILICONE SUBSYSTEM		
DWG BY	W. K. MILLER	DATE	9/23/2006
CHK BY	W. O. MILLER	DATE	9/23/2006
APR BY	APPROVED	DATE	-

ERNEST ORLANDO LAWRENCE
BERKELEY NATIONAL LABORATORY
UNIVERSITY OF CALIFORNIA - BERKELEY

1m STAVE
VACUUM BASE PLATE

MICROFILMED:	DWG. TYPE	SHOWN ON	SCALE: 1:4	DO NOT SCALE PRINTS
	PART	nnXnnn	SHEET 2 OF 2	
PATENT CLEAR:	DESIGN ACCT. NO.	CATEGORY CIDE	DWG. NO.	SIZE / REV.
	P1AP-11	AP6250	nnXnnn4	A