Pixel Insertable System Insertion Cartoon

3-October, 2000

Inner Detector Steering Group Meeting

Insertion Sequence

- AE is not present
- Far side Services are introduced in quarters
- Pixel detector is brought up to end of bore
- Beampipe auxiliary support is introduced through pixels and the support wires are removed
- Far side services are terminated to pixel detector and pixel frame is inserted into bore
- Vertical support wires are re attached
- Pixel detector is pushed 1.2m into bore of ID, and B-layer tooling is introduced as per current B-layer installation
- B-Layer is passed around supports and clam shelled around beampipe
- B-layer is inserted into Pixel detector on the baseline rail system
- The Pixel detector with B-layer is pulled back to the end face to allow near side termination of both Pixel and B-layer services
- Pixel detector and its services (near and far) with B-layer is pushed into position
- Services are terminated to the service runs to PP2

Far Services are inserted

Far Services
in Quadrants

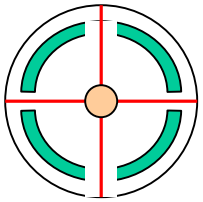

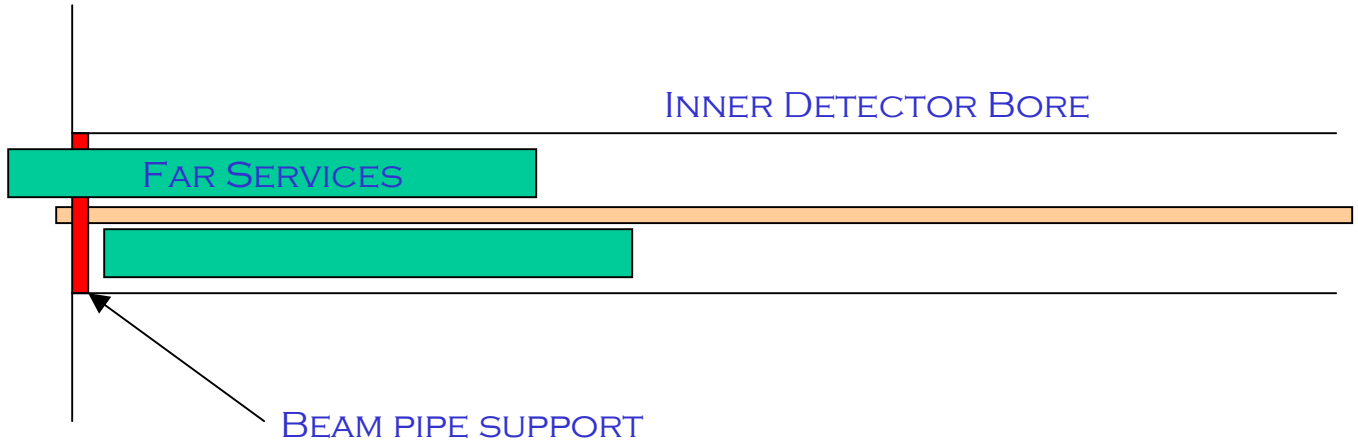

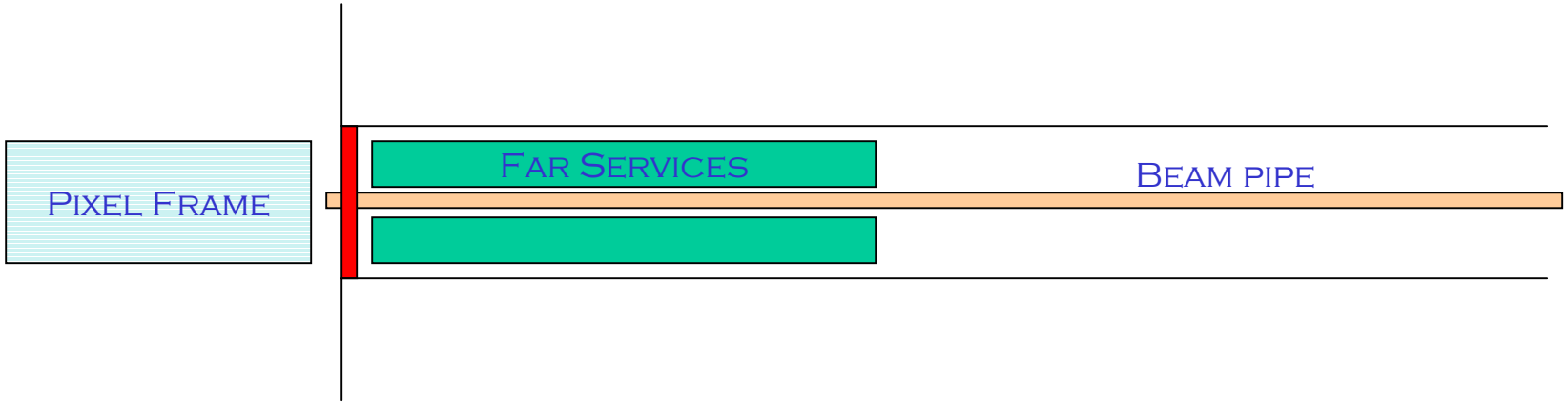

Pixel Detector

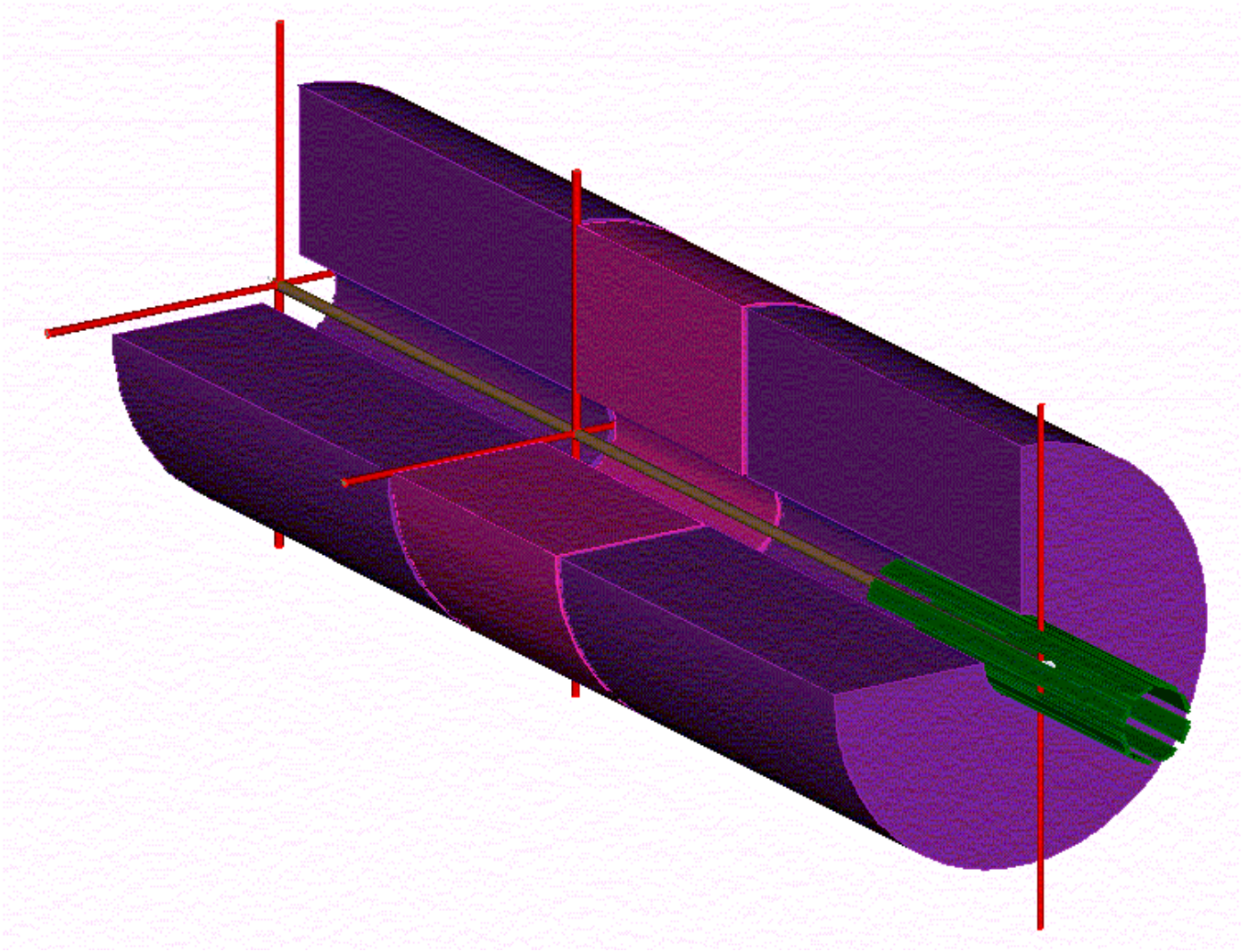

Beam pipe support transferred

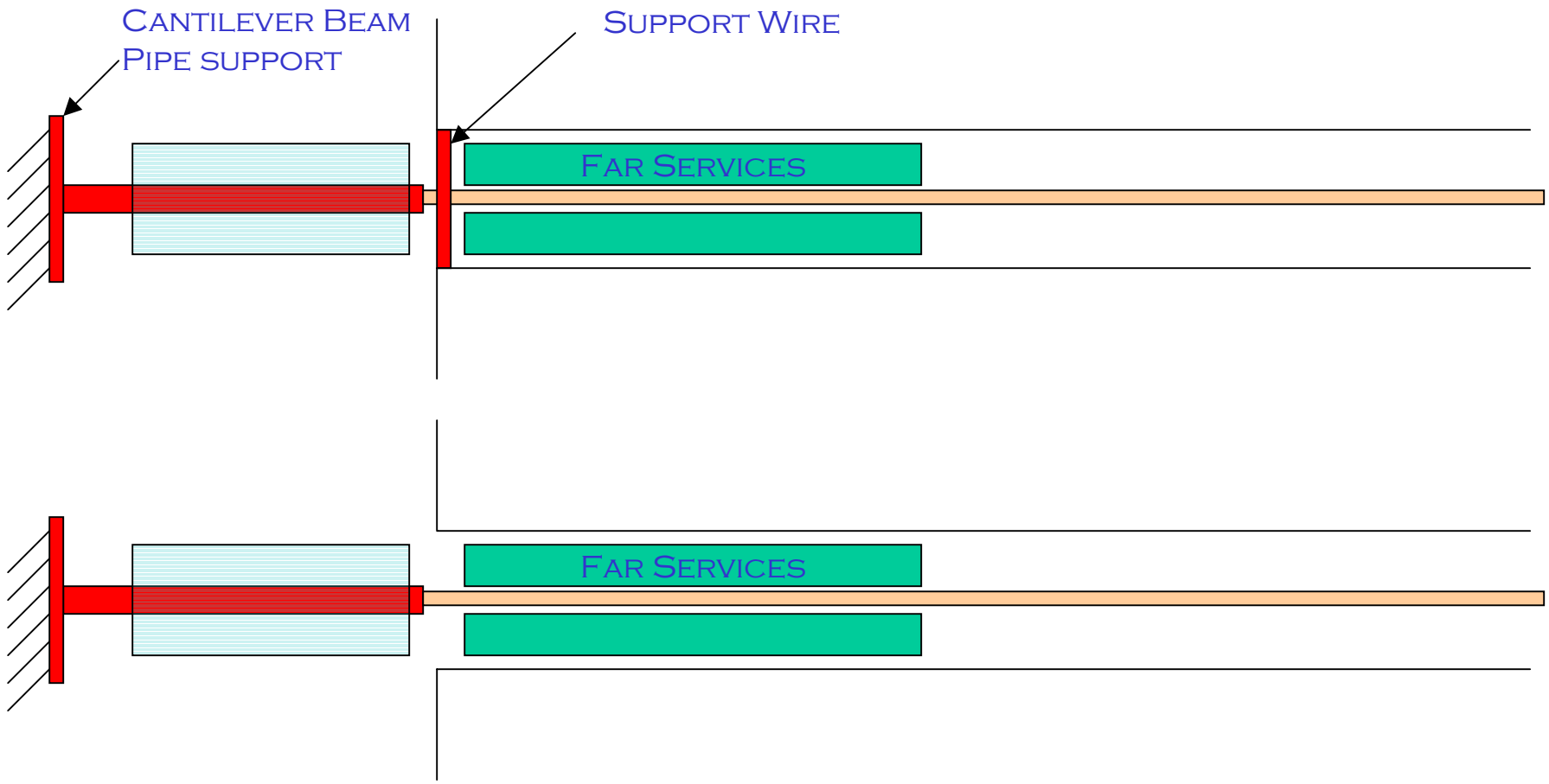

Pixel Detector

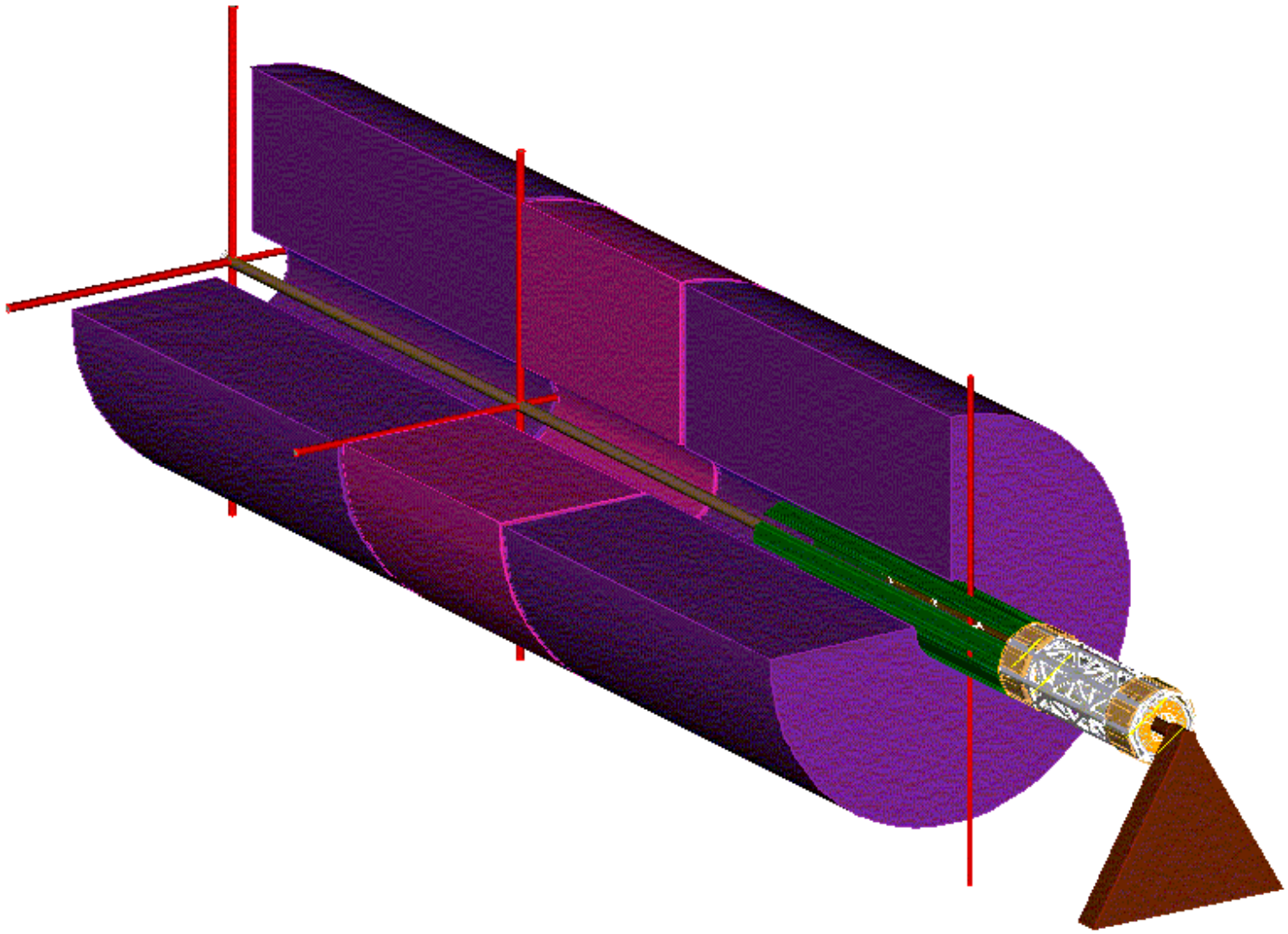

Far Services Terminated Pixels inserted

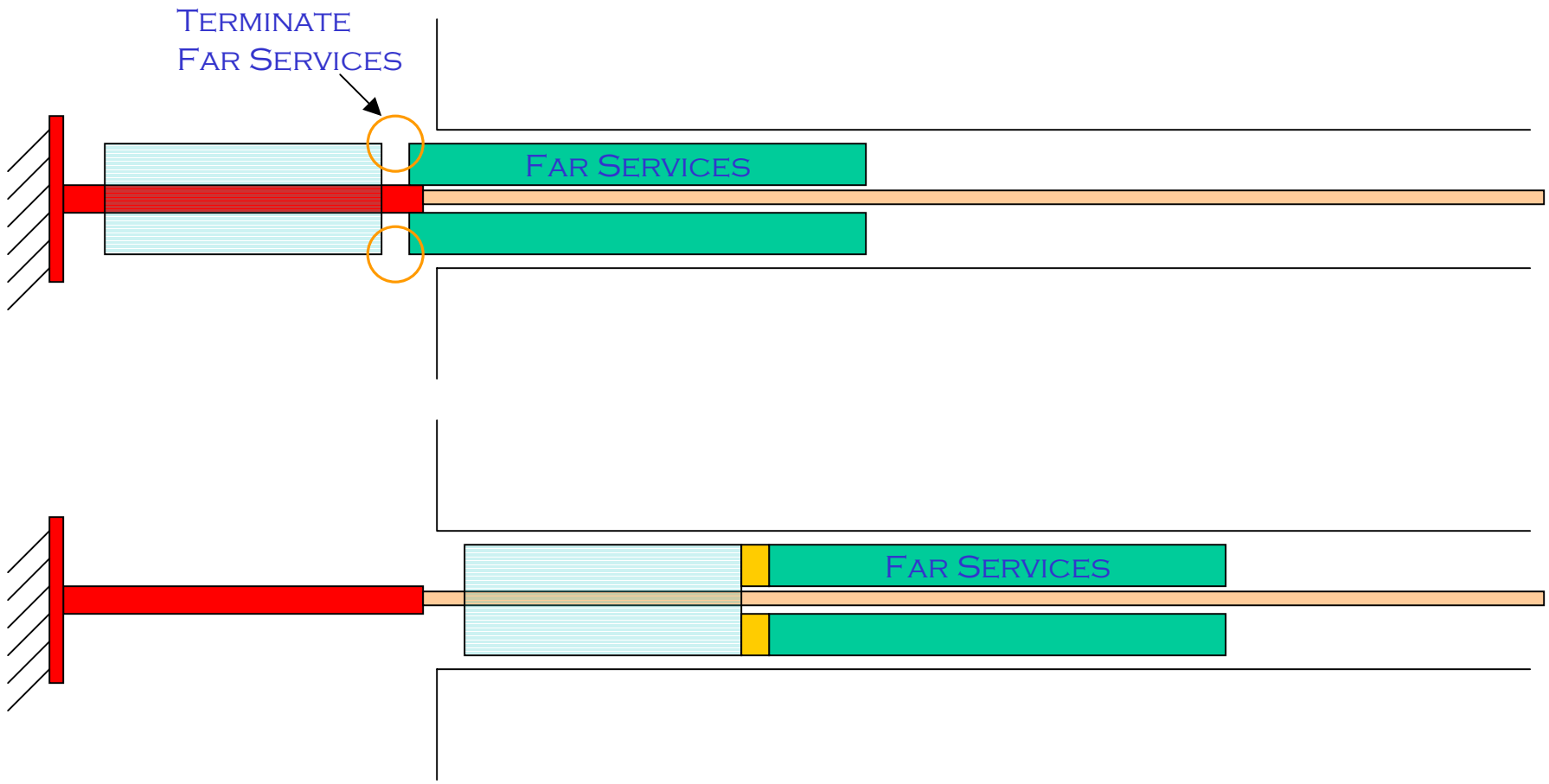

Pixel Detector

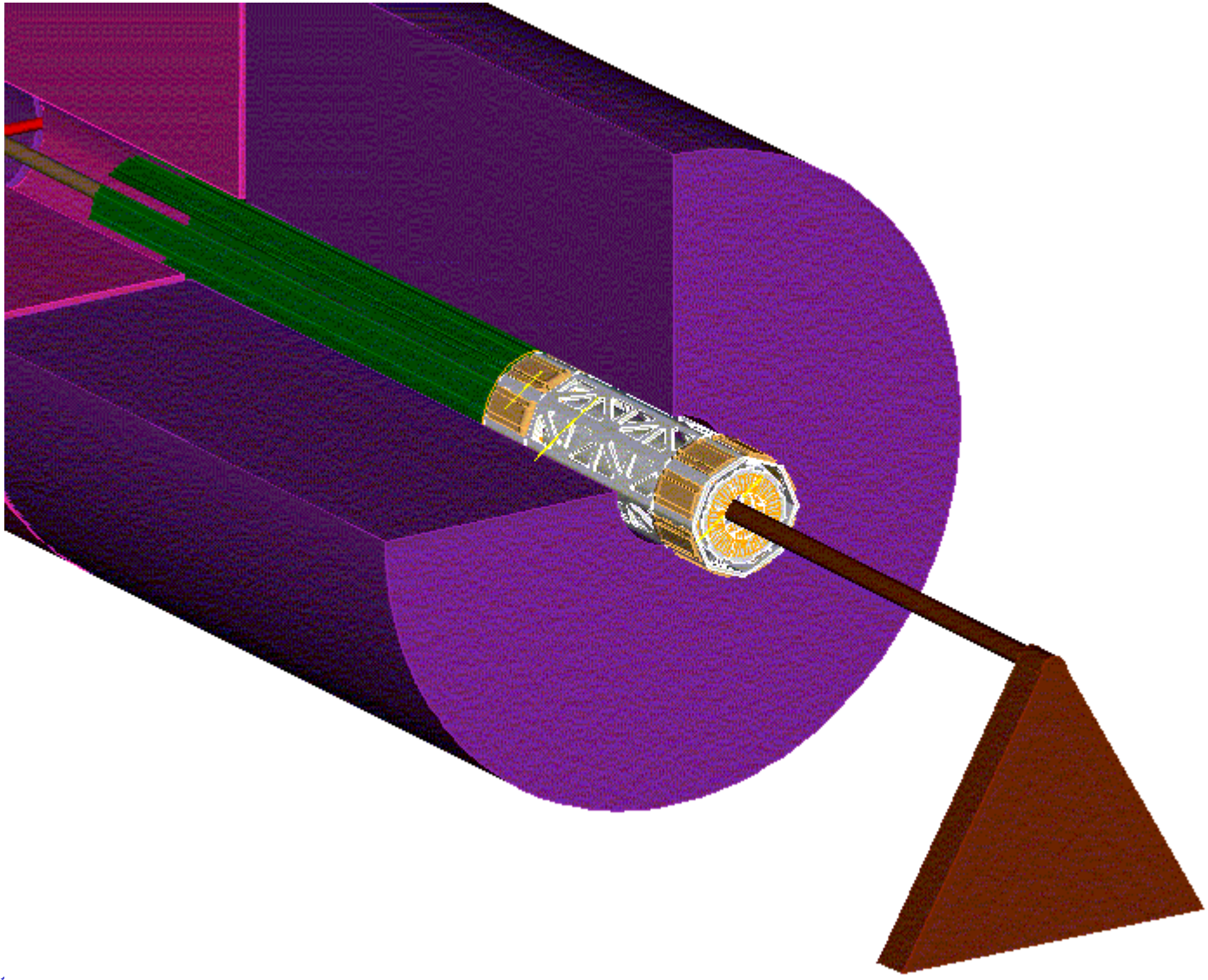

B-Layer insertion configuration

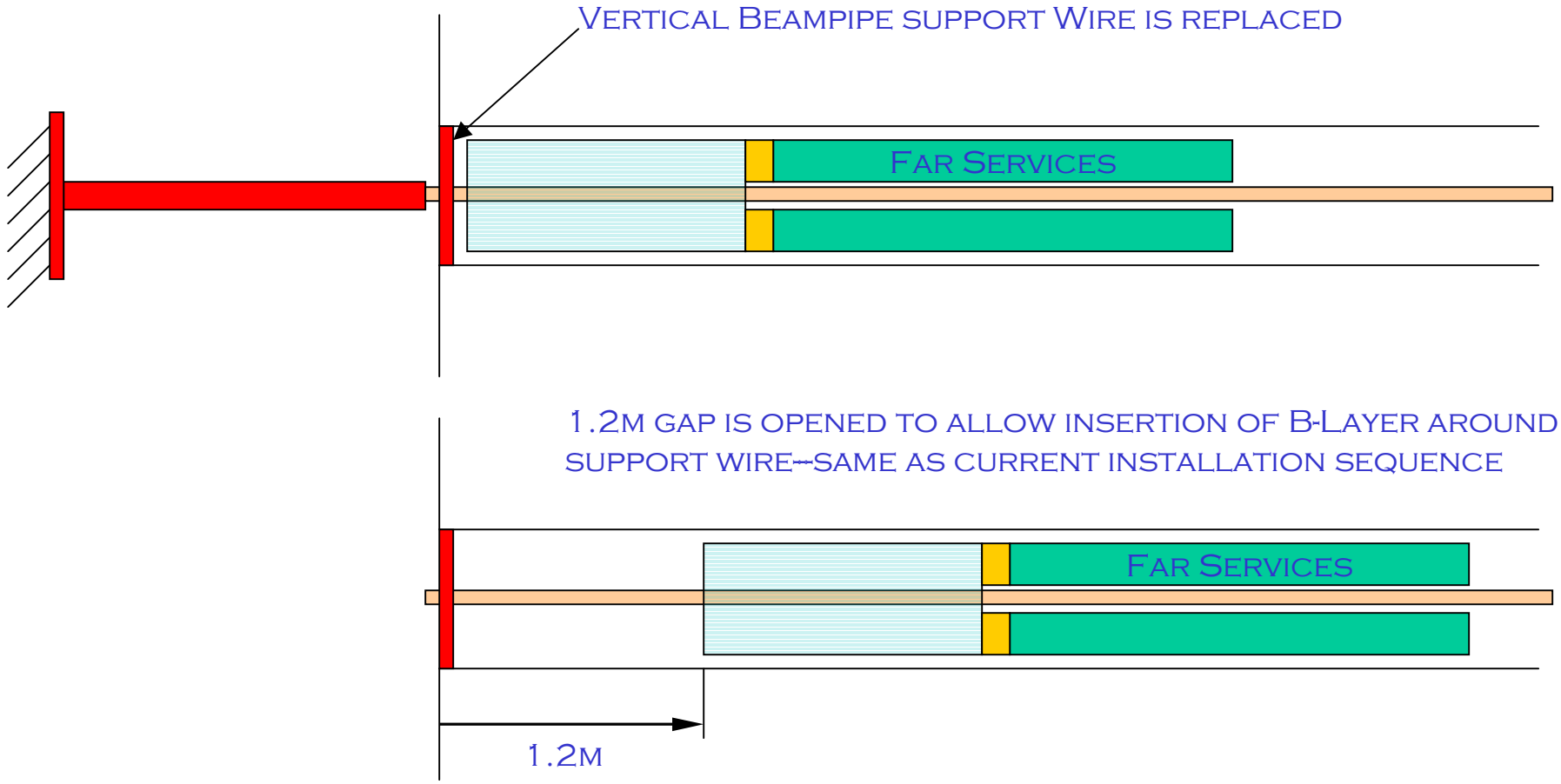

Layout of C-Side of Inner Tracker

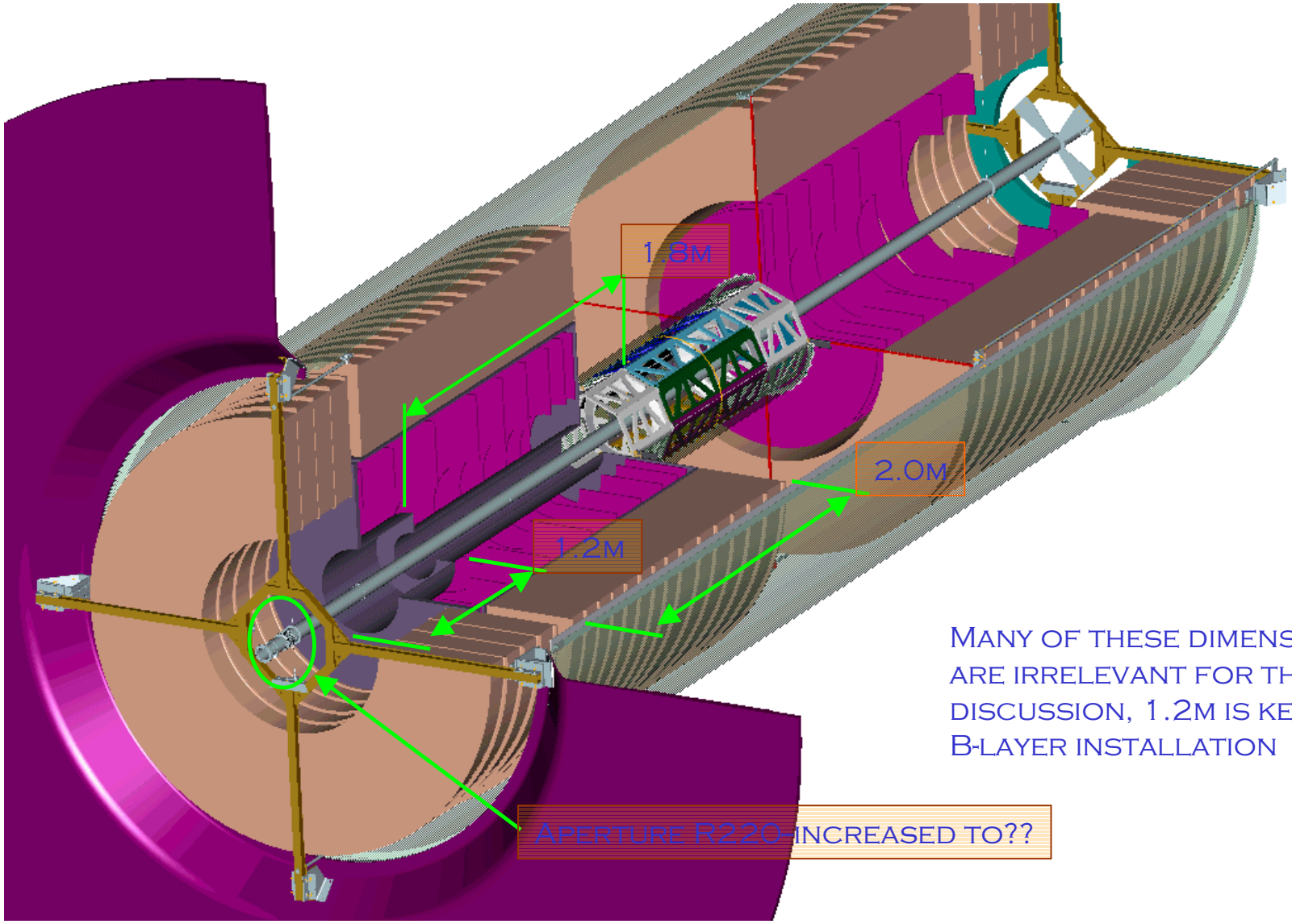

Many of these dimensions are irrelevant for the discussion, 1.2m is key for B-layer installation

B-layer Clam Shelled and Inserted

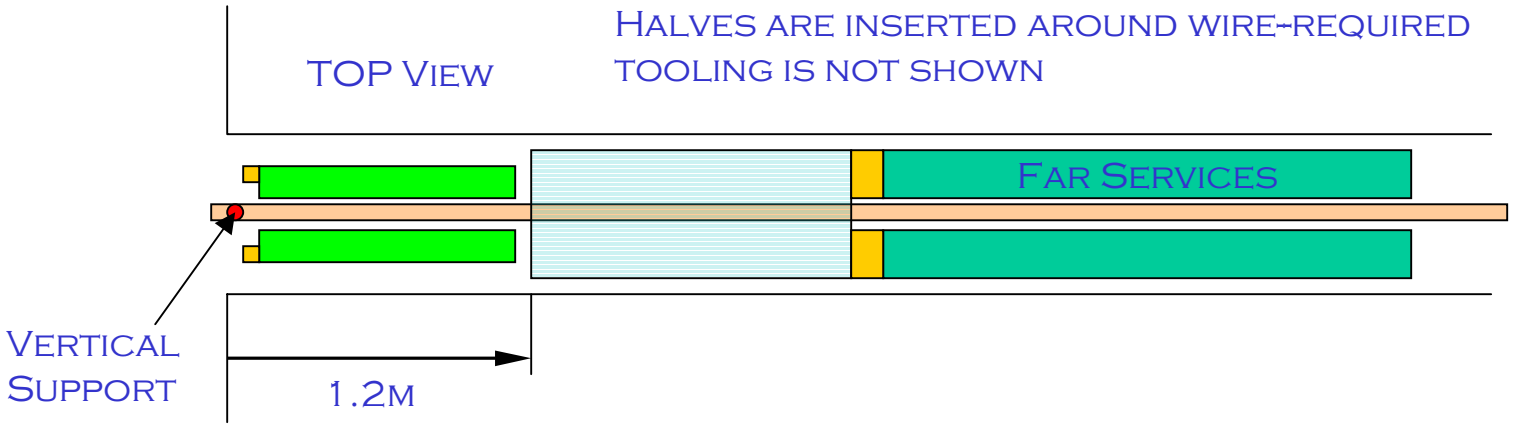

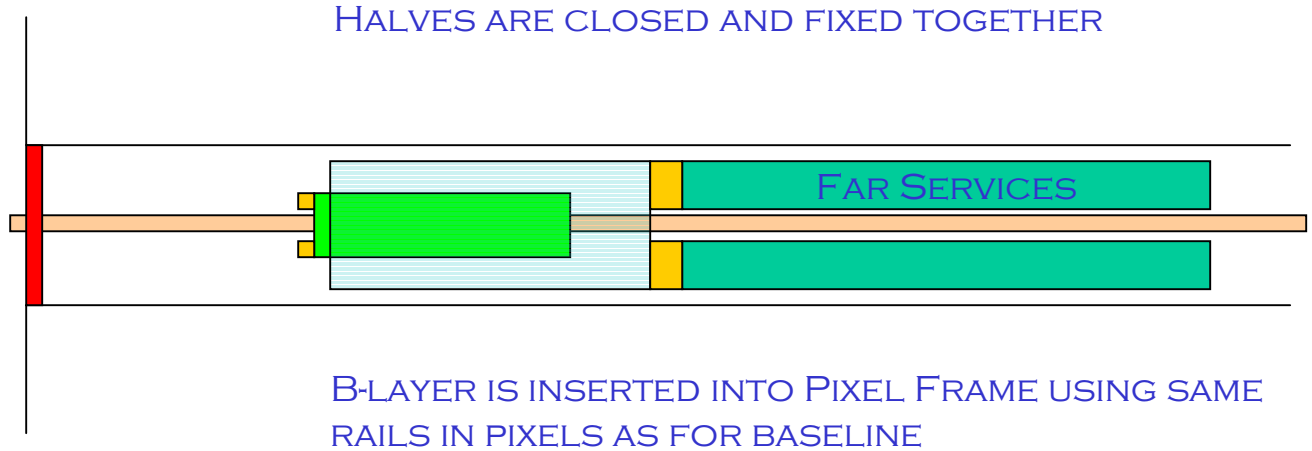

Pixel Detector

Insertion of B-Layer

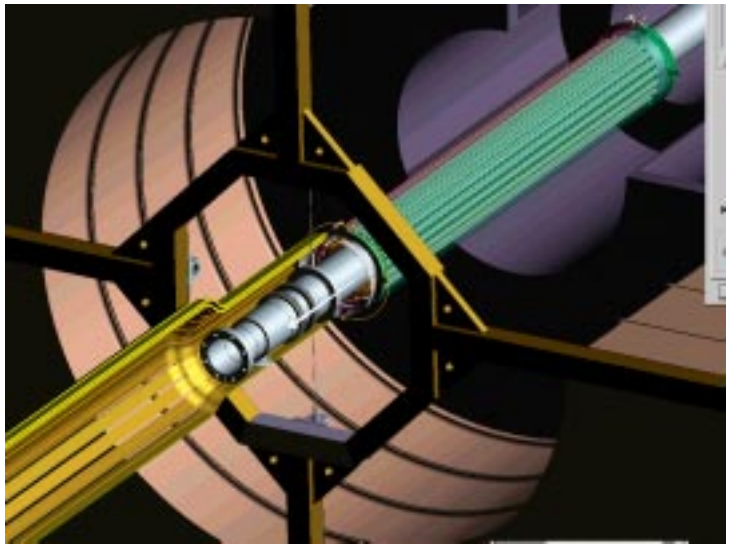

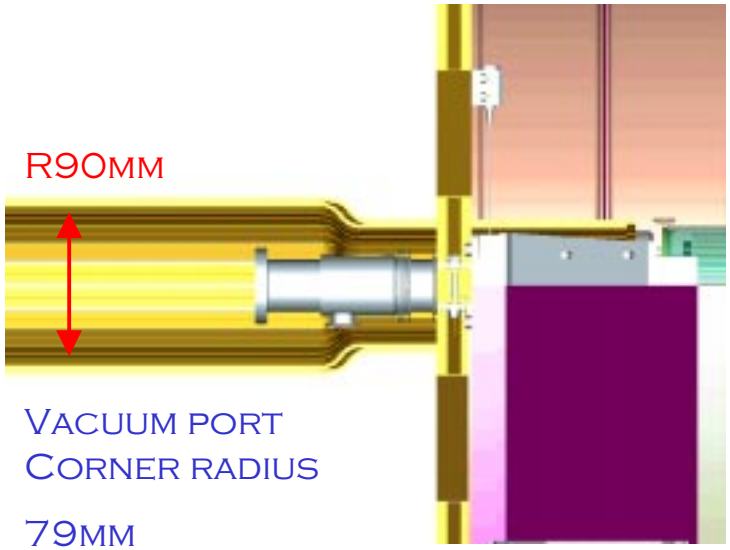

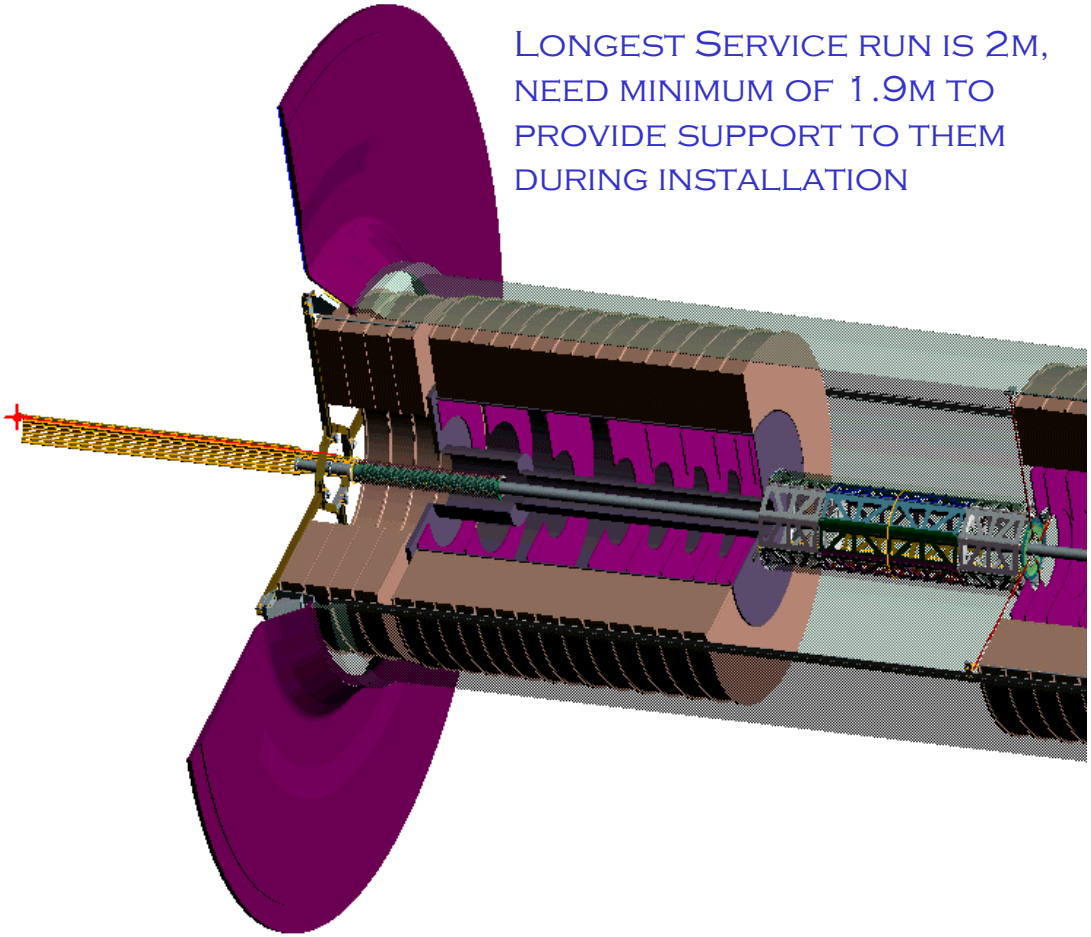

Longest Service run is 2m, need minimum of 1.9m to provide support to them during installation

ION Pump not present

Pixel Detector

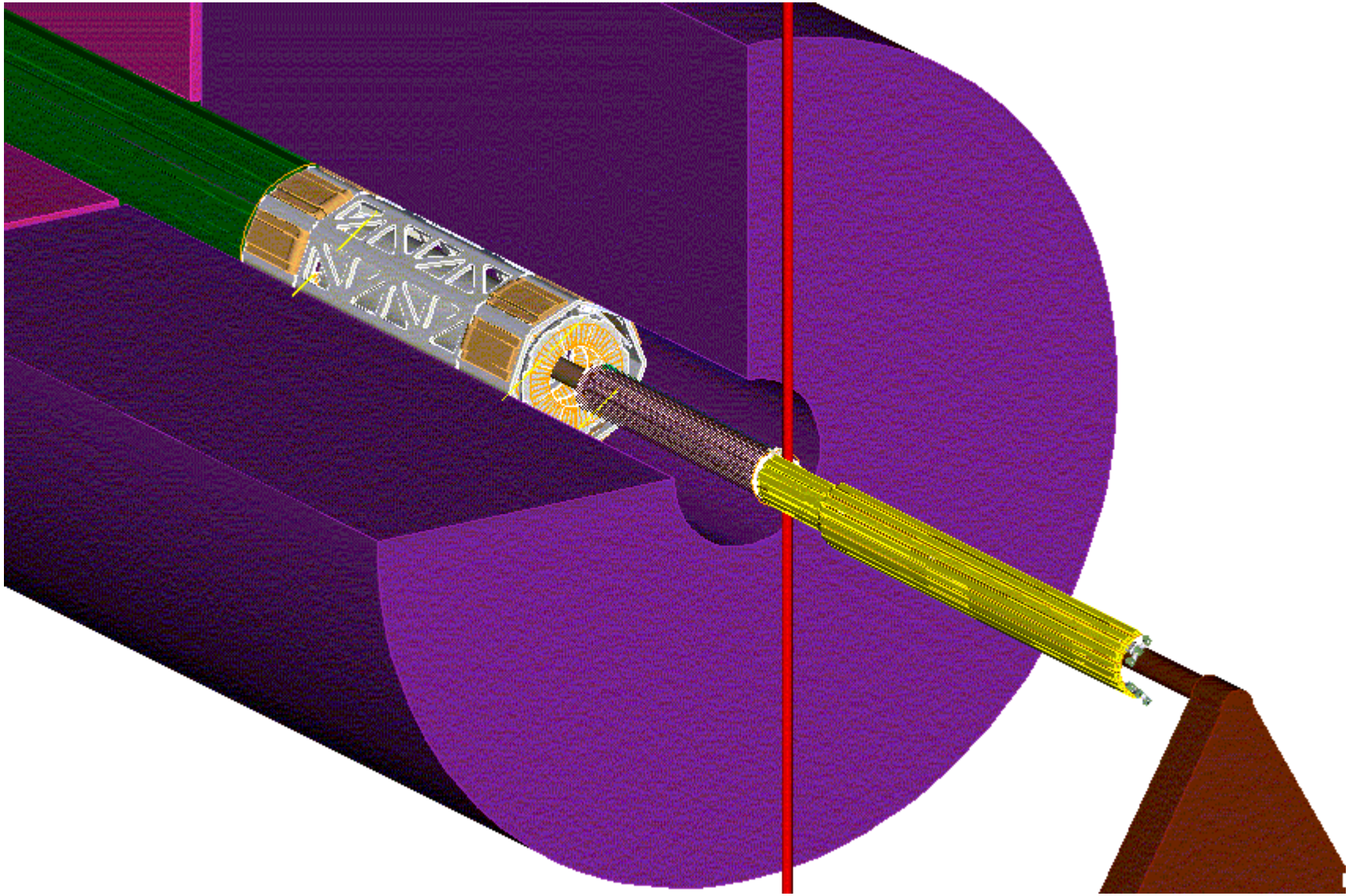

B-Layer Assembly Concept

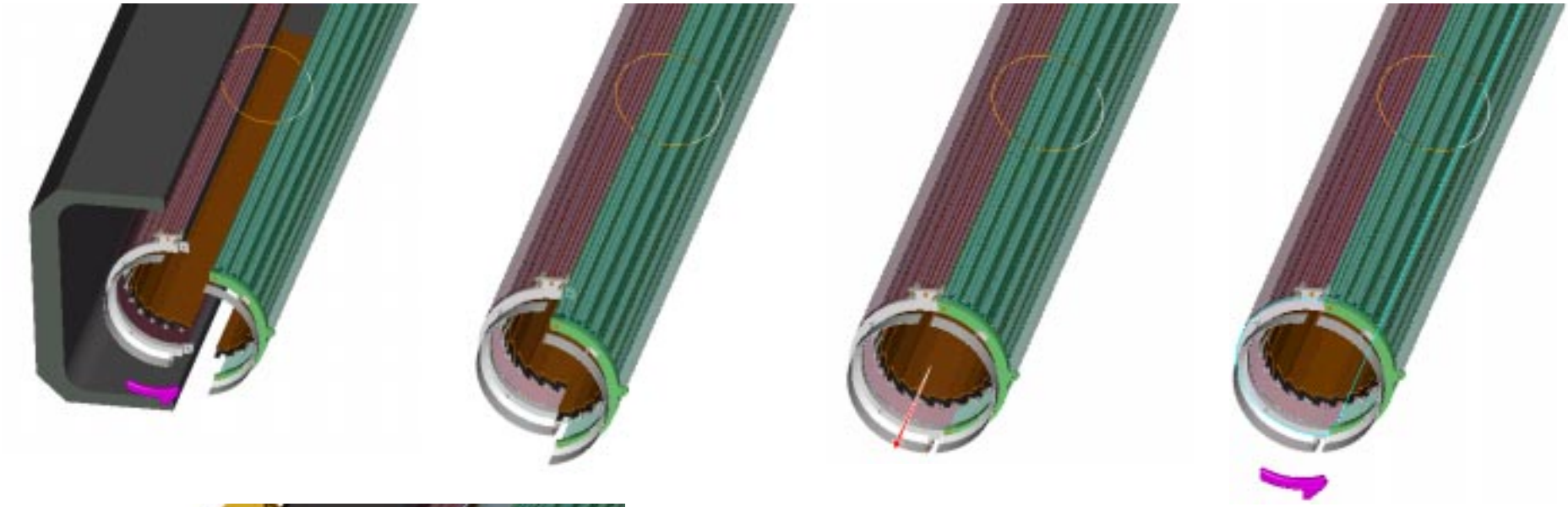

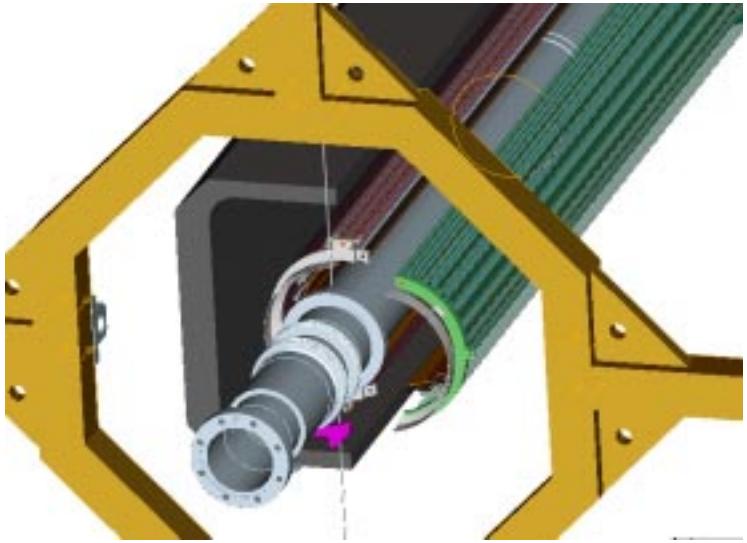

Halves are held together by longitudinal actuation

Preliminary design of tooling structures is consistent with space available now. Length of 1.2m required

B-Layer Installation Finish

To terminate the services to the B-layer, and the rest of the detector, the detector must be withdrawn to gain access

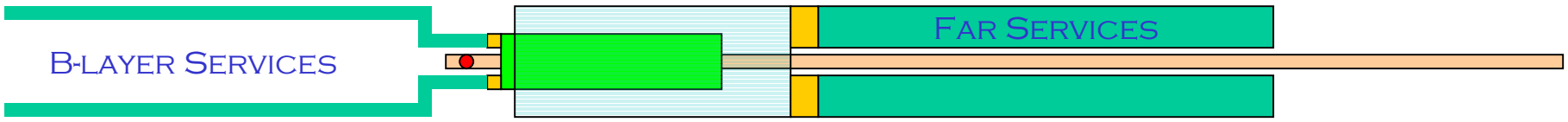

B-layer services are terminated first as they will be obscured by the rest of the pixel services

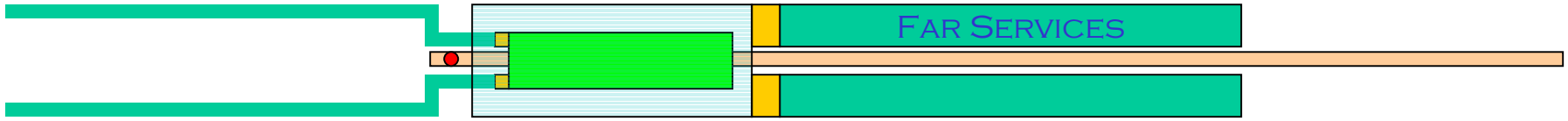

The B-Layer is then pushed into the frame into its final position. Depending on the length of the Pigtails on the B-layer, this step may be avoided

Service Termination

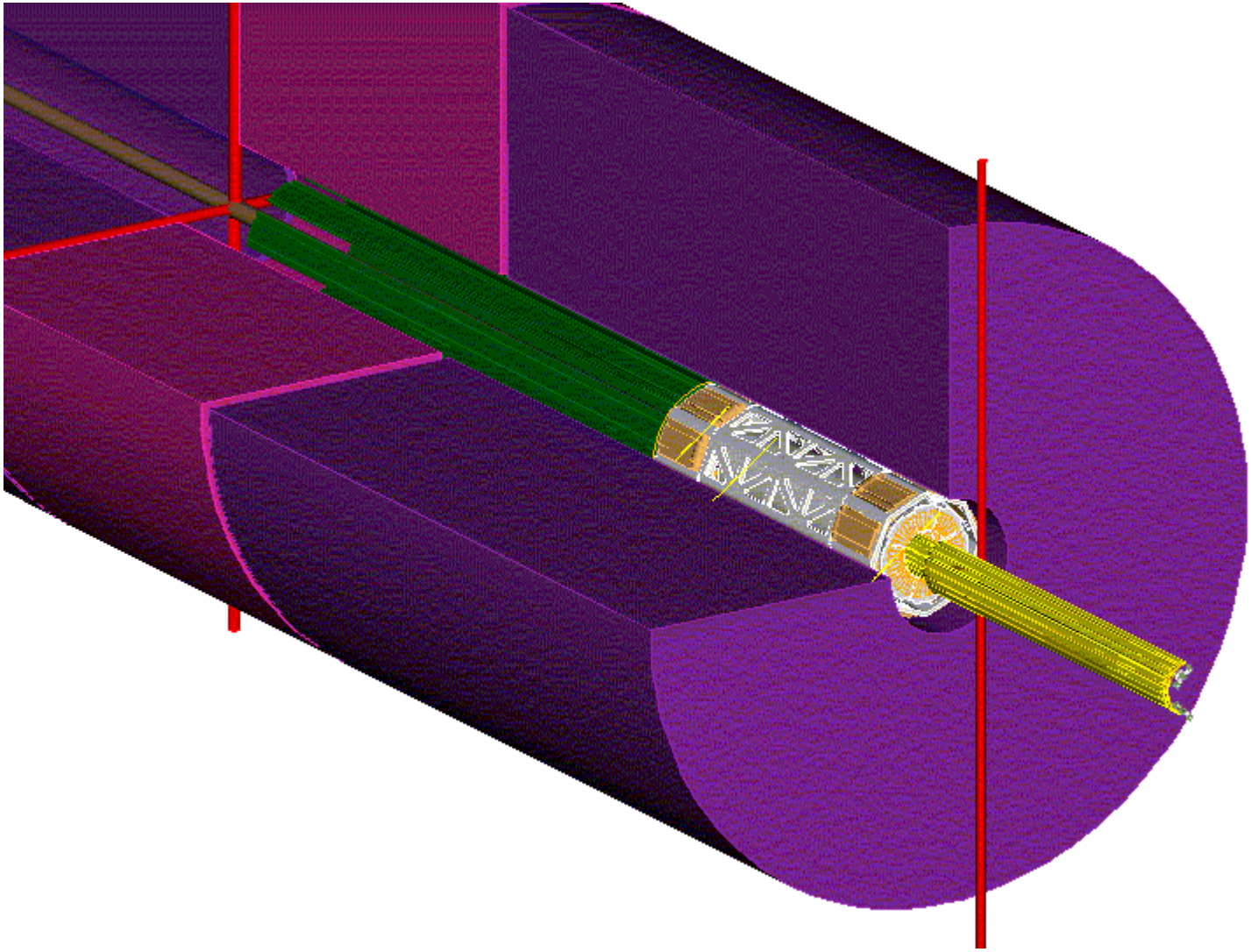

Pixel Detector

Service Supports

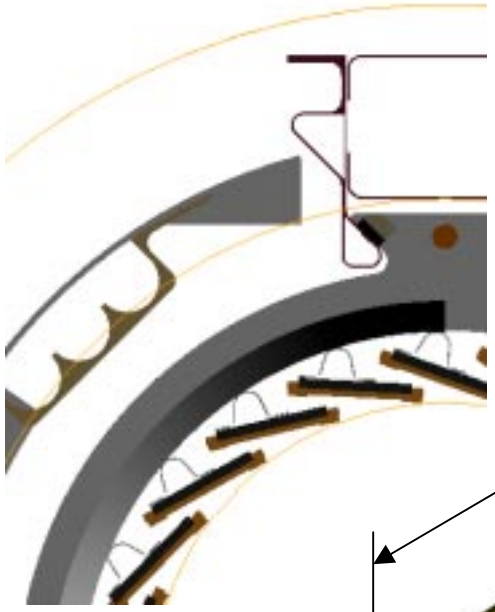

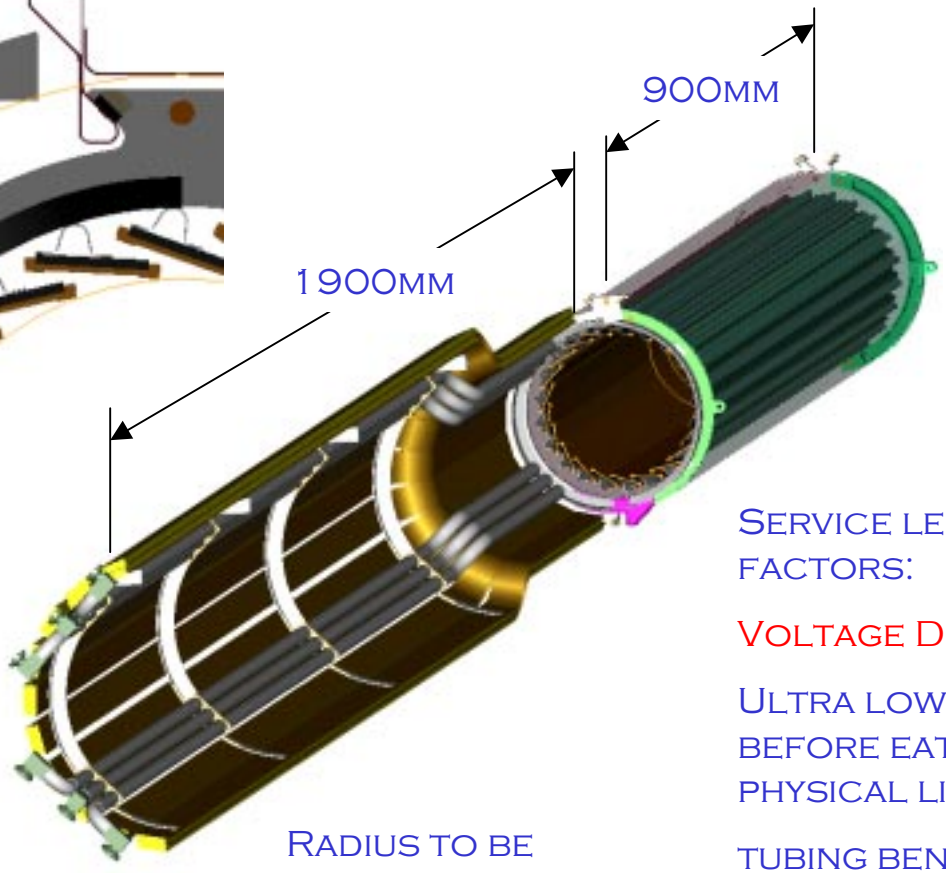

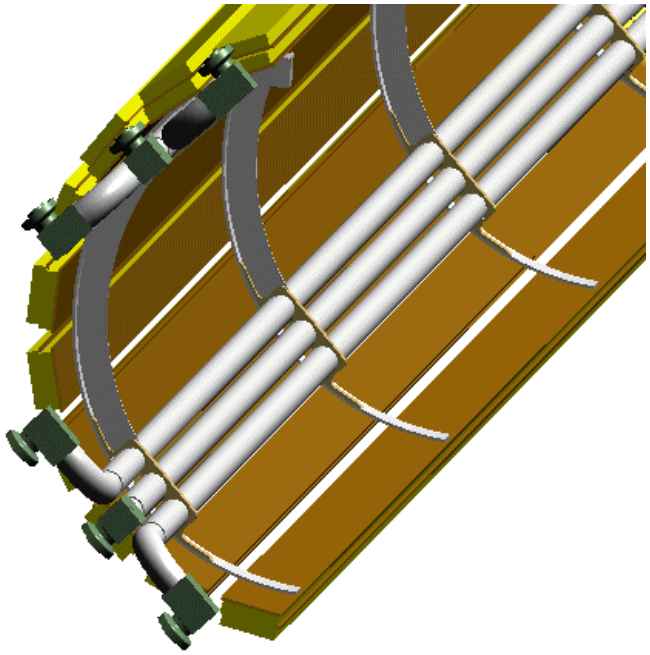

Radius to be adjusted for new layout

Service lengths are determined by two factors:

Voltage Drop and Tubing Bends

Ultra low mass cables can only go so far before eating voltage drop budget, and physical limit on fine pitch flex.

tubing bends represent a change in interference envelope and often necessitate a break.

Pixel Near Side Service Termination

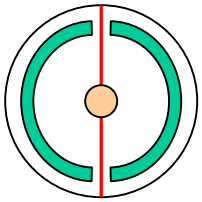

The near side services-both B-layer and the remainder of pixel services need not be split into quarters. During installation, there is only one vertical support wire obstructing the path

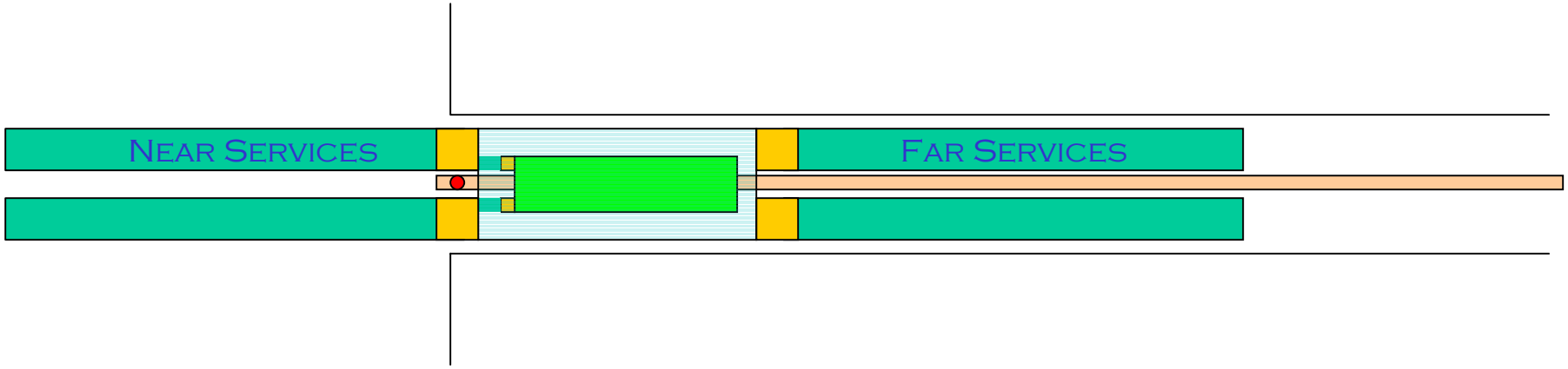

Pixel Detector

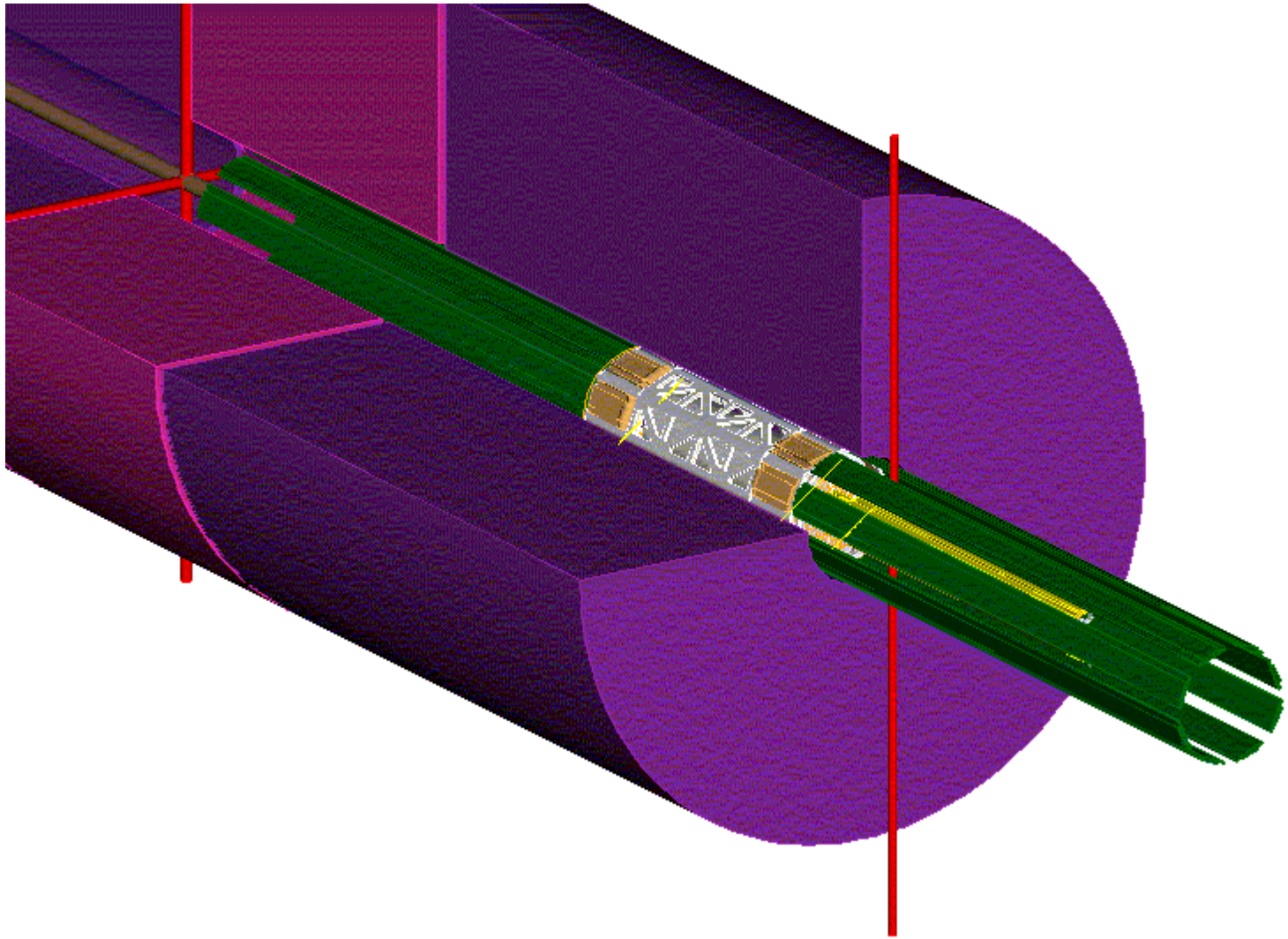

Pixels in installed position

After terminating the near side services the detector can be inserted fully. The services to PP2 can be terminated and if desired, on the near side, the horizontal beam pipe support wires can be installed

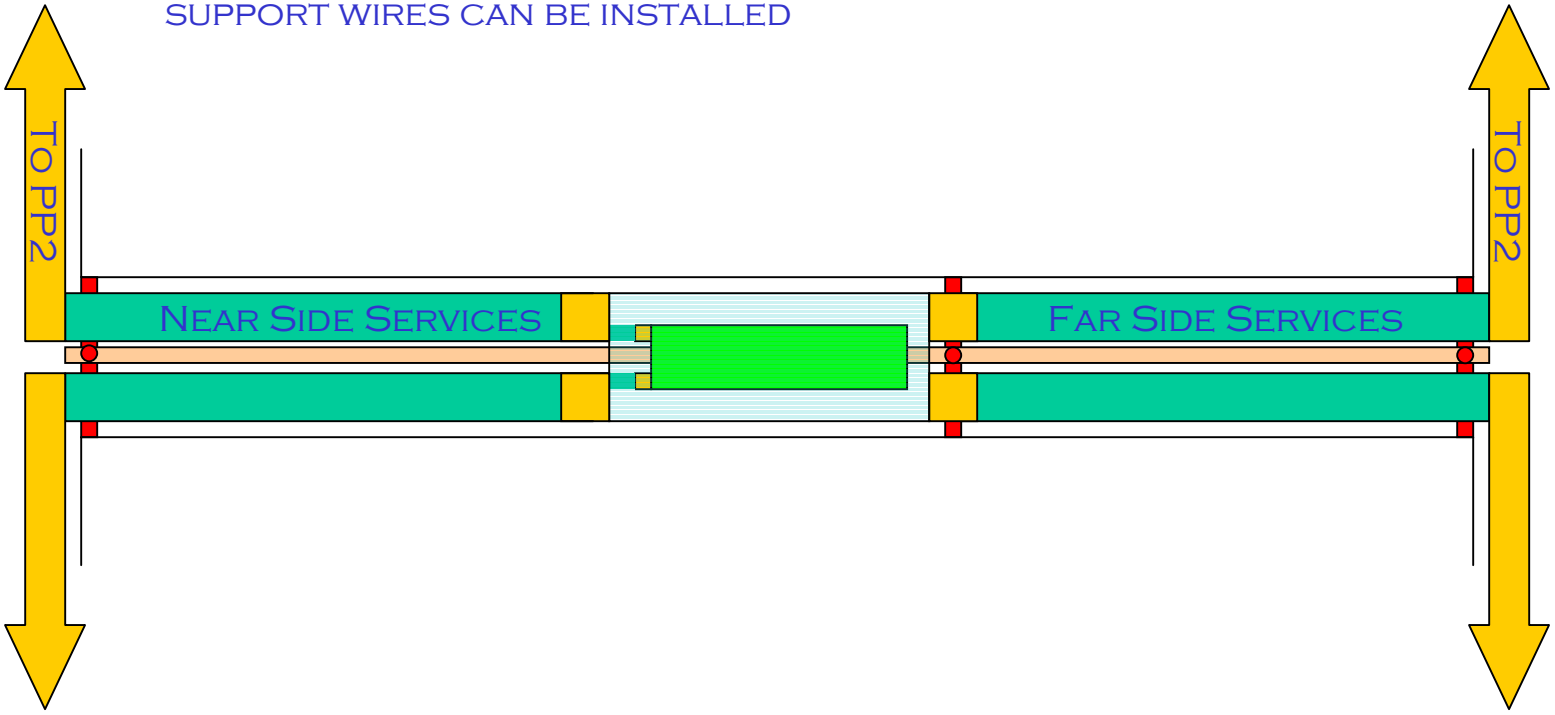

Pixel Detector

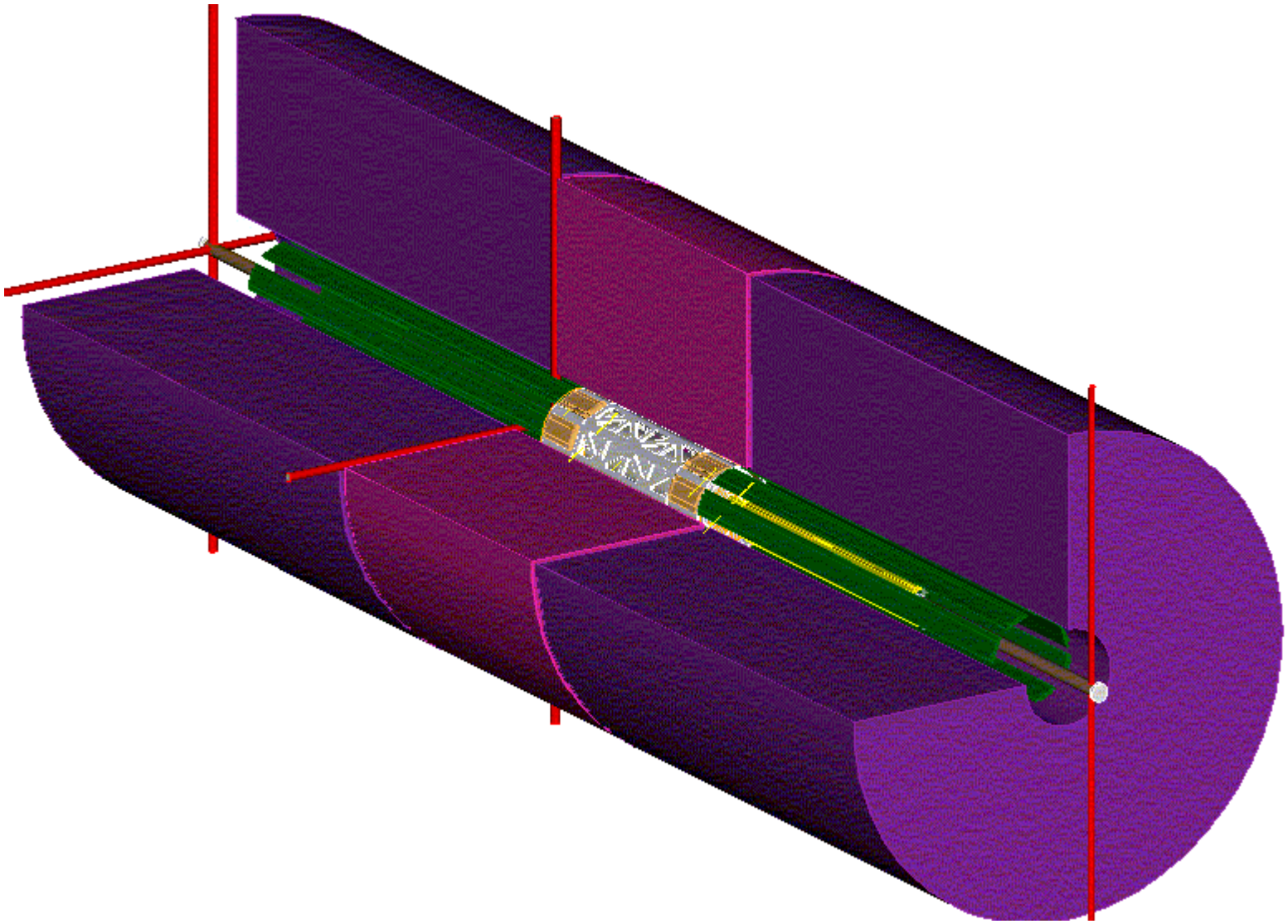

AE in Place-Insertable Pixel Impossible

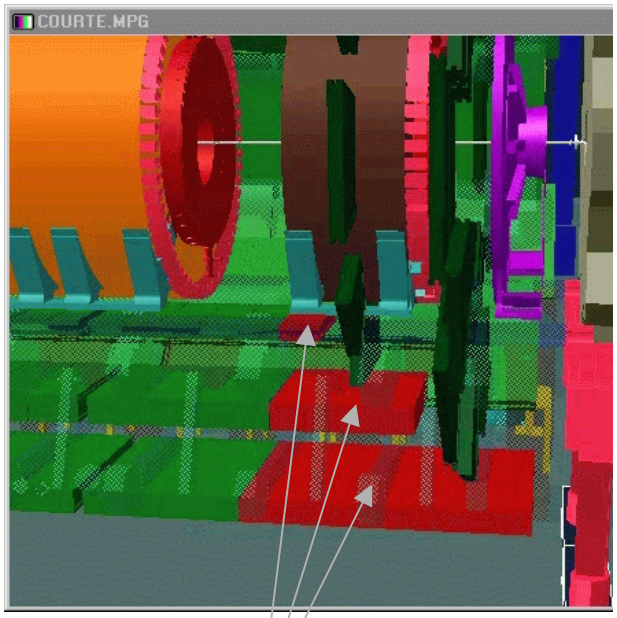

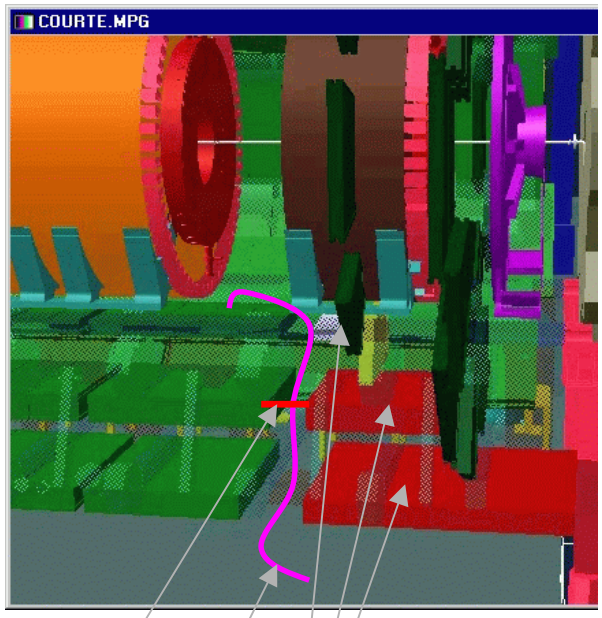

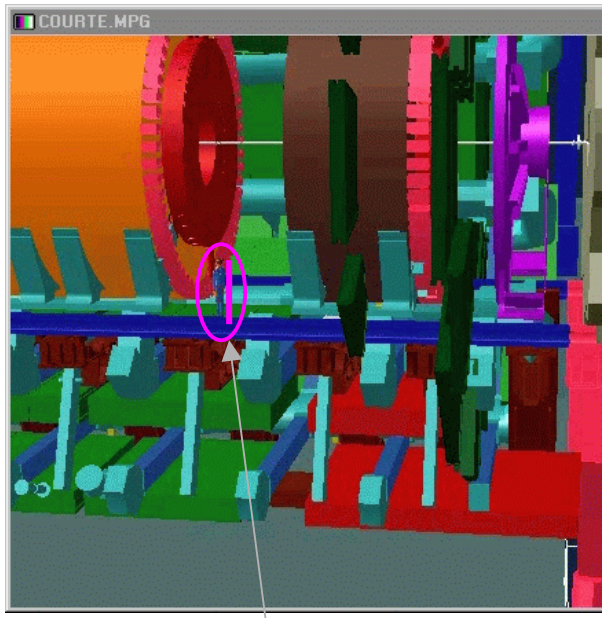

~ 1 meter

Chambers indicated in RED, Closed Position

Access

Chambers in Open Positions

Smallest opening: 870mm-this number needs verification

Reference Man-Magenta Bar of Same height shown next to him