Service Integration of the ATLAS Pixel Detector

May, 5 1999

Service Workshop

Rutherford Appleton Laboratory

E. Anderssen, LBNL/CERN

Brief History of Layout

- **Baseline Design in TDR has tubular truss end frames with disks that extend past Z=800**
- **Progression of design important to remember:**
  - Baseline in TDR
  - Costing
  - Analysis
  - Material Estimates
  - Structural Performance Baseline
- **Design changed to flat panel to reduce cost**
- **Changed again to Z<780 Layout of Disks for integration reasons**

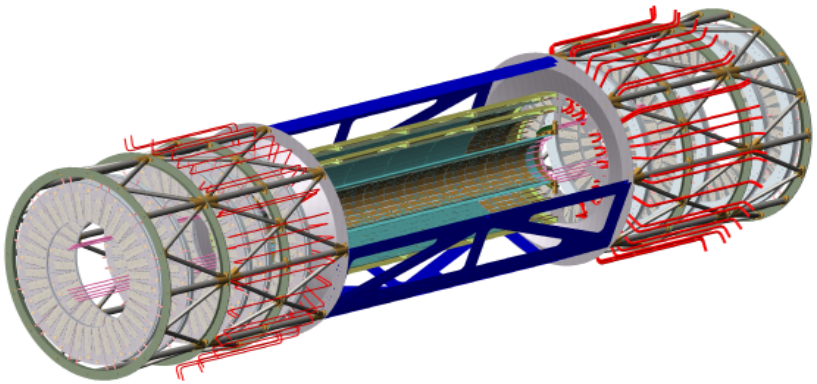

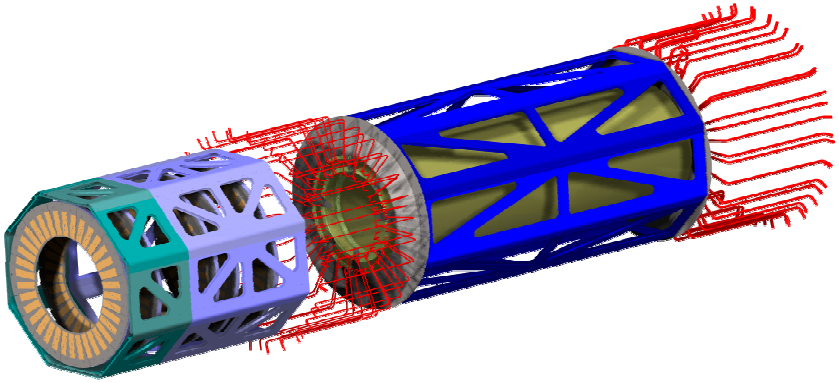

Global Support Structure

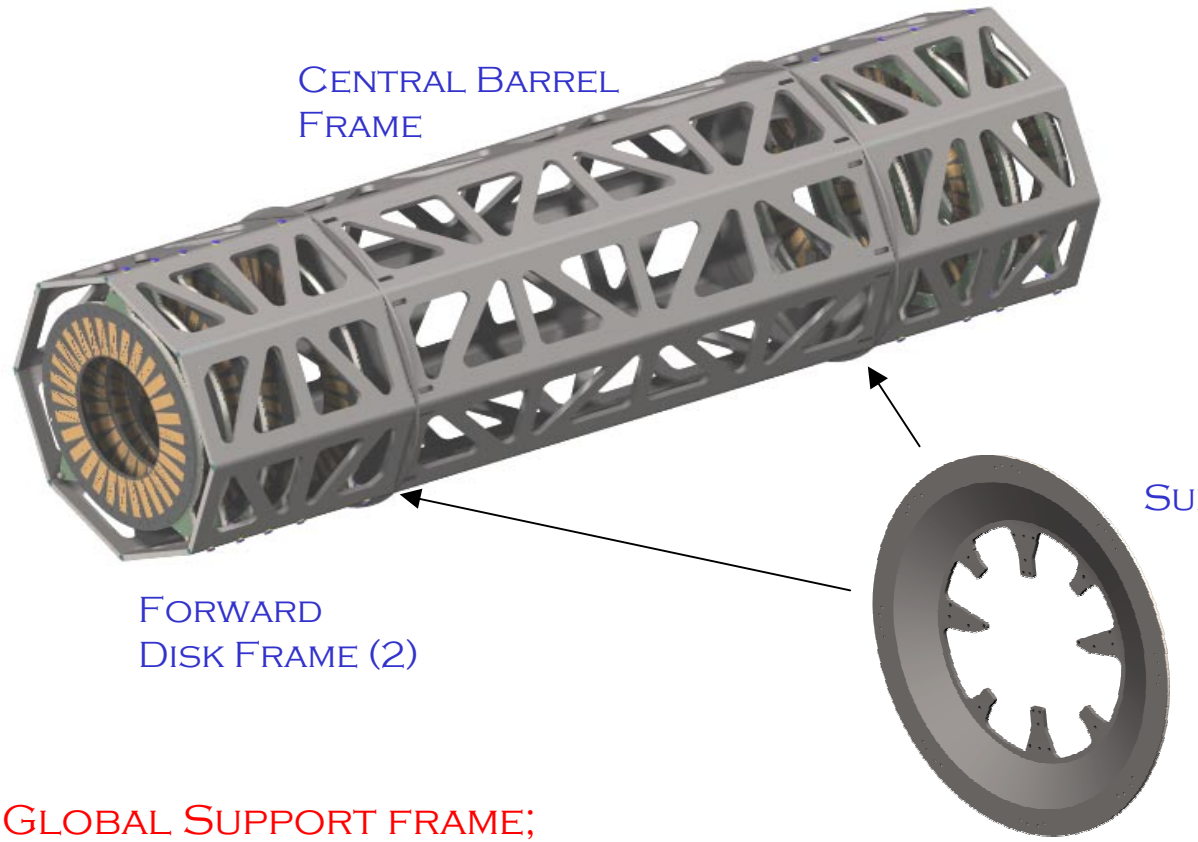

Overall Pixel Global Support frame;
specifically the articles shown:
Central and Forward frames, Support Cones and
Disk Support rings. (disk sectors also included)

Global Support Concept

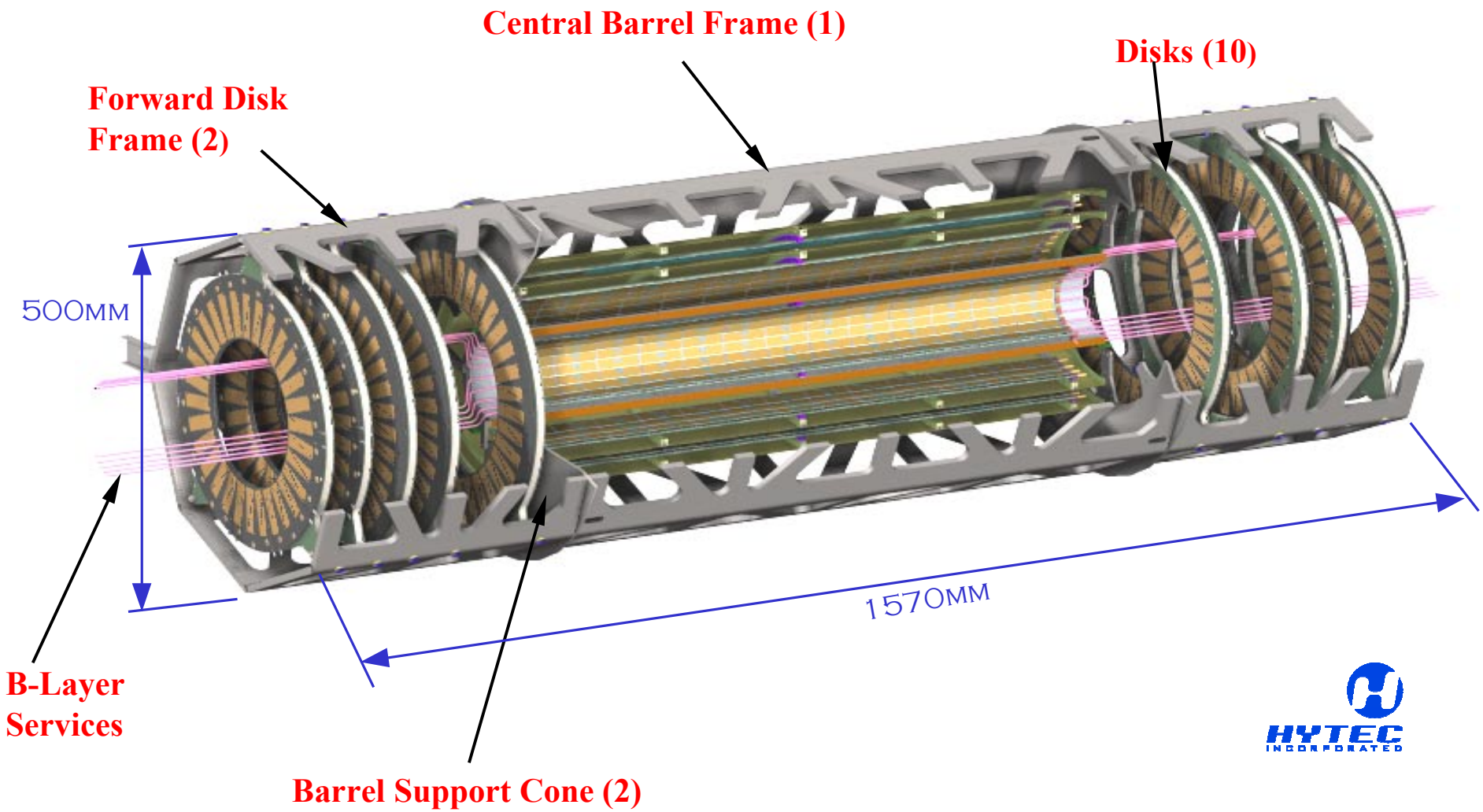

Change to TDR Layout in Disk Region

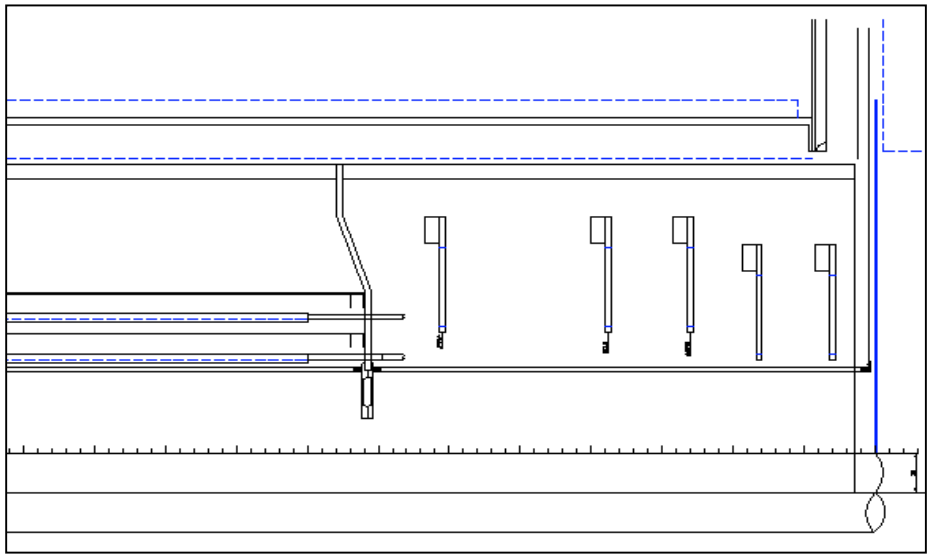

- **New Layout reduced number of disk modules by ~7%**
- **Eased integration with the beampipe**
- **Solved SCT Clash**

3 Barrel Layers	B-Layer	18 Staves
	Layer 1	42 Staves
	Layer 2	56 Staves
13 Modules per Stave		
		1508 modules
5 Disks each end	1-3	12 Sectors
	4-5	10 Sectors
6 Modules per Sector		
		672 Modules

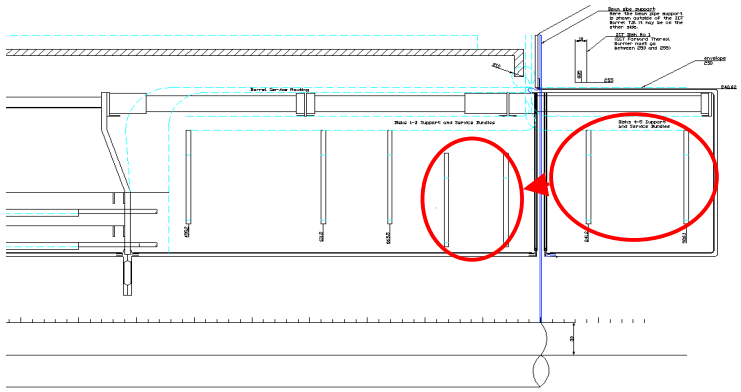

Old Baseline with change indicated

Local External Environment

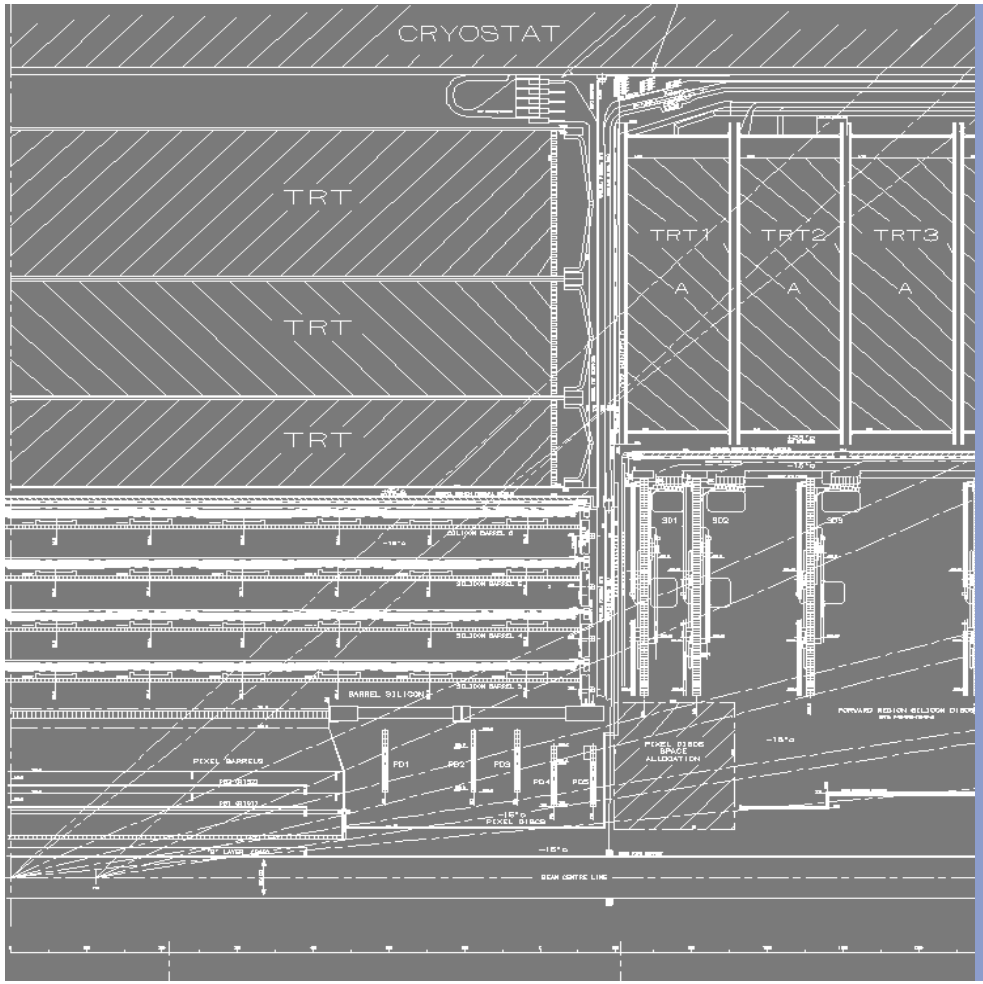

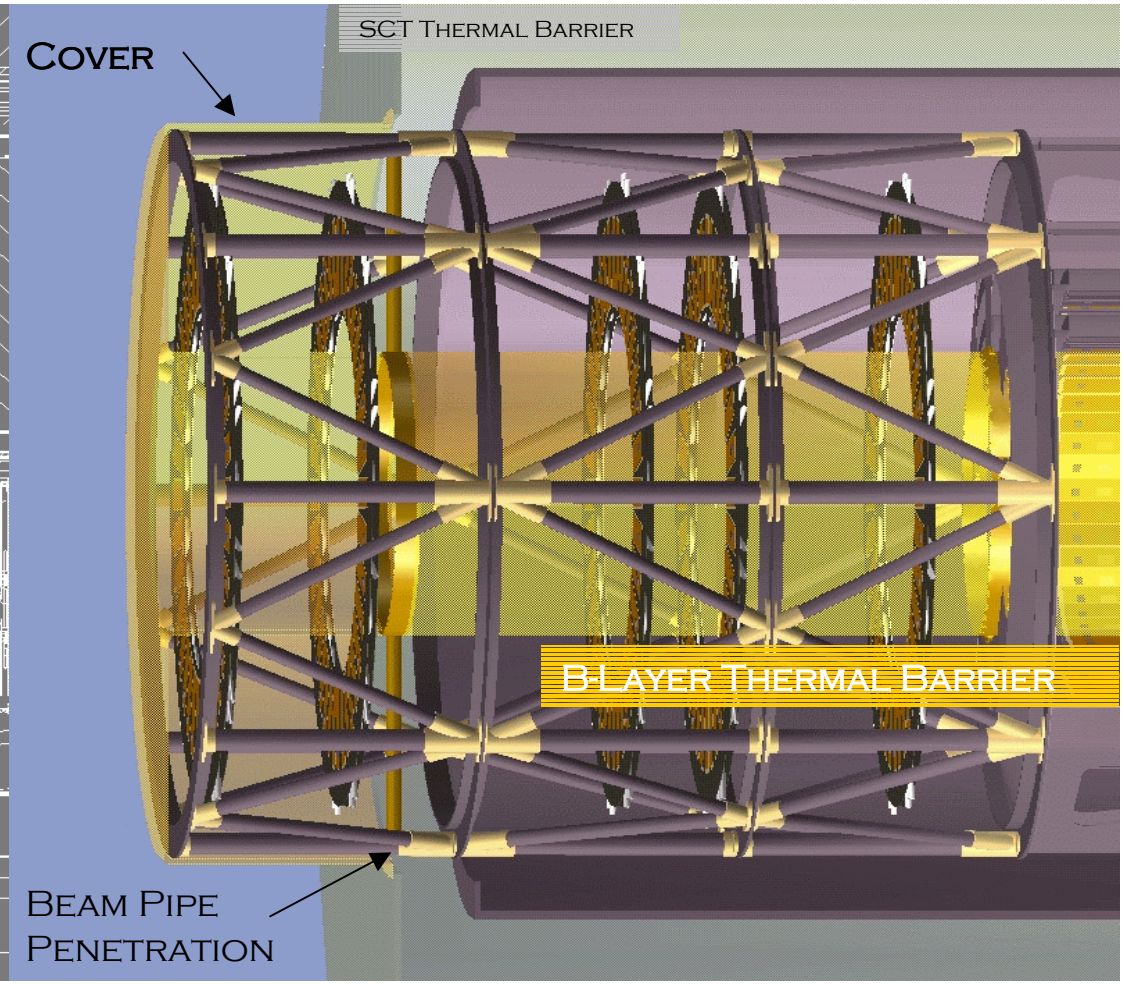

Pixel Detector

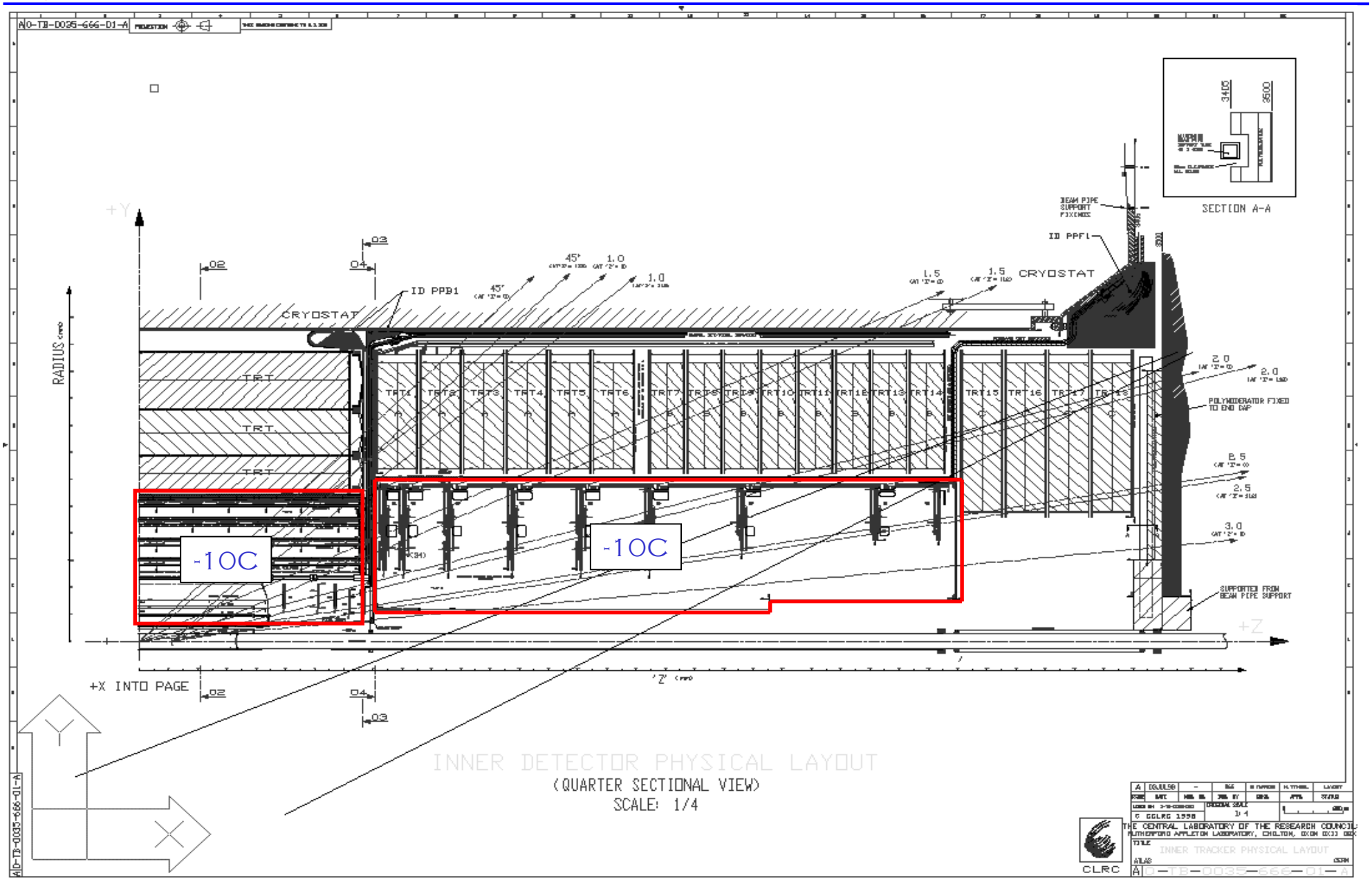

Pixel Detector Services

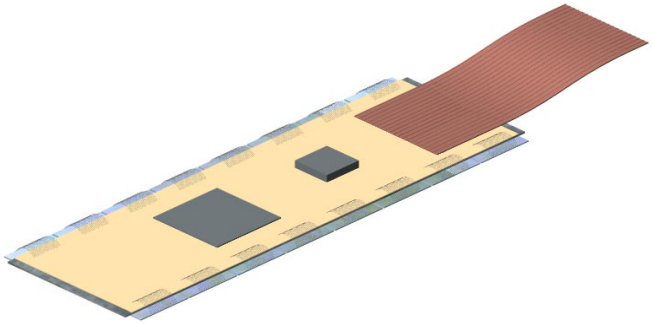

- Module Services
  - Power
  - Control
  - Signal
  - Connectors/Breaks
- Cooling
  - Supply/Return
  - Manifolding
  - Temperature Sensing
  - Connectors/Breaks

-Module services dominate service volume. There are 1946 modules combined in the barrel/forward region, and 234 in the B-Layer.
-Cooling Exhaust tubes are the largest single items to route
-B-Layer Services, while similar, have different modularity and are routed differently

Pixel Cooling

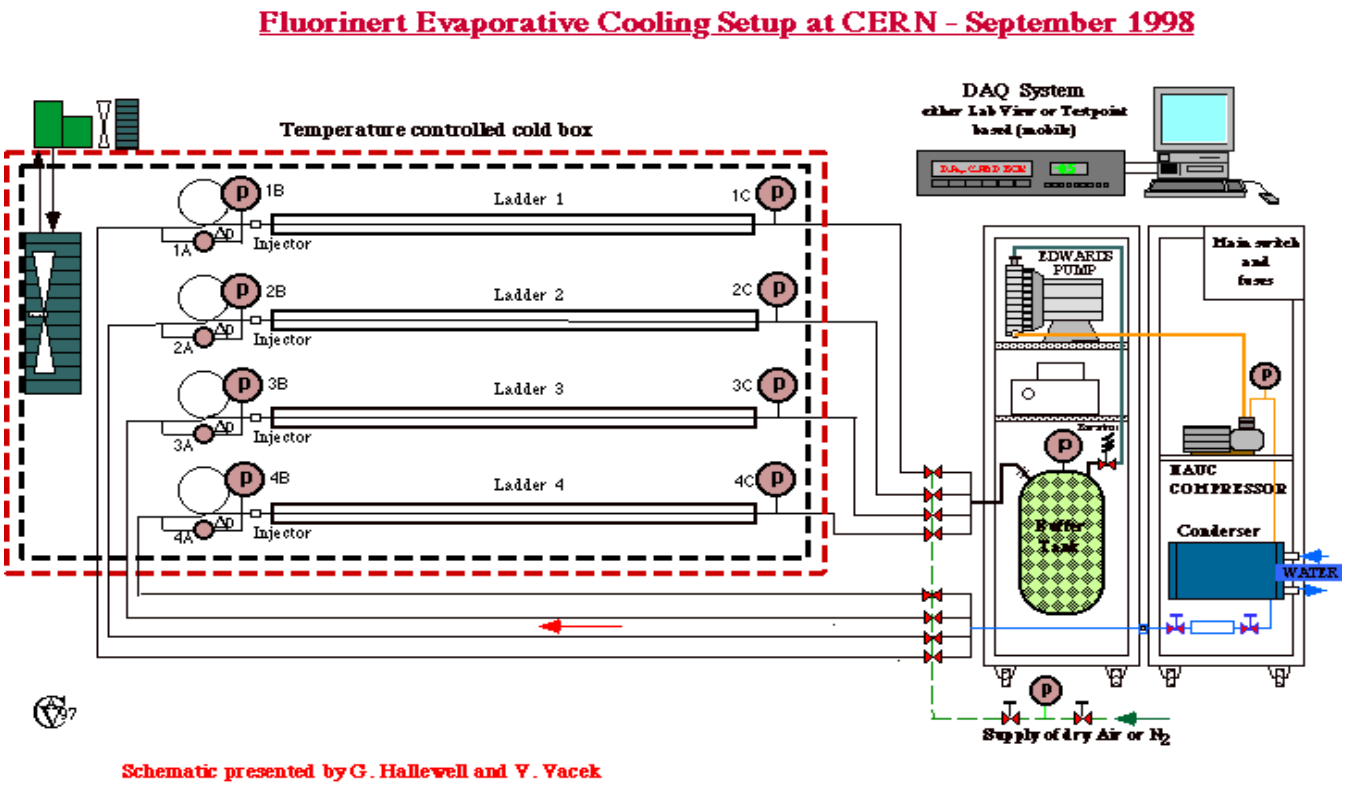

- Evaporative cooling is the baseline for the Pixel Detector
- Phased cooling program underway at CERN to determine operating parameters--results Fy99 timeframe
- Only have estimated tubing sizes for time being

Proof of concept in Pixel Structures

- Evaporative C4F10 cooling has been shown to work in Pixel structures in tests at CPPM and CERN
- Disk sectors were tested in all orientations with a "realistic" 4m ΔH tube routing showing satisfactory results
- All stave designs have been shown to work with evaporative cooling
- All Structures designed for lower Power Budgets--may need to "update" designs
- Thermal qualification at prototype manufacturing sites still use monophase fluid (methanol water, or Binary Ice) to test thermal performance of structures

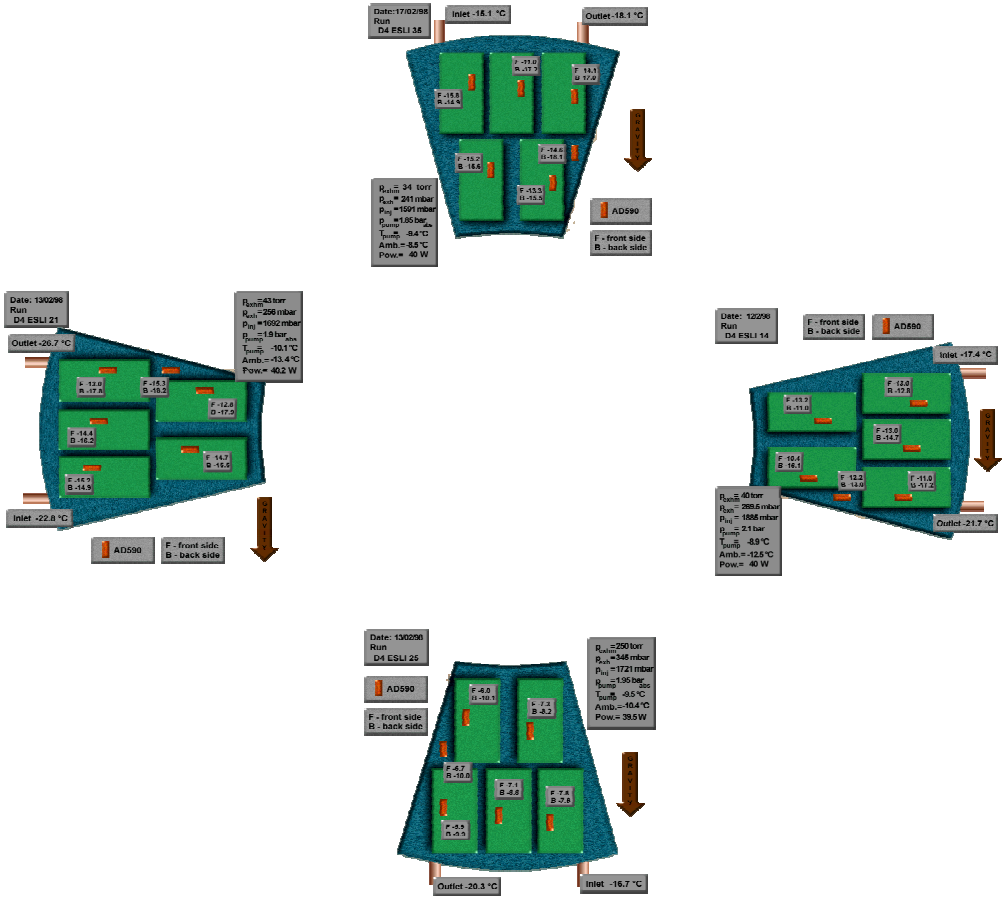

Current Status Pixel Detector Cooling

- **CERN based ATLAS Cooling group established**
  - Intent to establish proof of concept for Evaporative Cooling of SCT structures followed by determination of relevant engineering parameters to design system
    - other ATLAS cooling issues as well
  - Manpower is an issue
- **"Cooling Decision" slated for Late May '99**
  - Cooling review 26-28 May 1999
- **Phase II starts after cooling review**
  - Subject to final approval at Cooling Review
  - Full scale system development is planned
  - Schedule is optimistic-tied to manpower issue
  - Services will not be fully understood until after Phase II results are available
    - Design implemented in Phase II should be the current estimated plant
- **Overpressure Operation a concern as is possible different temperature operation**
  - SCT desires cooling temps as low as -35C and pressures as high as 10bar (3bar exhaust pressure)-quoting wildest worst case estimates
  - Current Pixel Designs are with preference to low pressure, backup designs are maintained only for the event of failure of evaporative cooling, not for higher pressure evaporative cooling.

Current Cooling Inventory

- Evaporative cooling is Pixel Baseline
- Space reserved for monophase coolant system--Pre Power Increase
  - Return line to PPB1 was 5.9mm, supply of 2.0mm
  - Supply and return tubes laid in at 5.9 to reserve space if monophase is required
    - These are not viable diameters for the higher power budgets and increased service lengths
- Cooling modularity
  - Two staves/sectors per circuit, except B-Layer, which has one circuit per stave
  - possibility of manifolding only exhaust under study (individual capillary supplies)
- Return line sized based on single phase flow parameters (QF=1)
  - Return line size under study for evaporative flow
  - Assumption that this is conservative
- Connectors still need investigation
  - Overpressure currently not foreseen in connector selection
  - Rad-hard connectors unavailable commercially for use at low radius

Barrel Layer 1	Barrel Layer 2	B-Layer	Disks	Totals	
56 Staves	42 Staves	18 Staves	112 Sectors	**PPB1**	**PPF1**
14 Supply	10 Supply	9 Supply	28 Supply	52 Supply	9 Supply
14 Return	11 Return	9 Return	28 Return	53 Return	9 Return

Module/Power supply Parameters

	Voltage		Current		Line Drop		Type I	Type II	Type III	Type IV	Type V	Pigtail
Power Supply	*Max*	*Nominal*	*Max*	*Nominal*	*Allowed*	*Worst Case*	*Actual*	*Actual*	*Actual*	*Actual*	*Nominal*	*Nominal*
VDD	6.000	4	2	1.52	2	2.067	0.415	0.376	0.272	0.554	0.200	0.250
VDDA	6.000	3.5	1.2	1.08	2	1.942	0.295	0.267	0.303	0.626	0.200	0.250
VCCA	4.000	1.75	1.5	1.44	2	1.982	0.393	0.357	0.258	0.525	0.200	0.250
VVDC	-	4	-	0.18	-	2.322	0.373	1.344	0.051	0.104	0.200	0.250
VPIN	-	10	-	0.0005	-	-	-	-	-	-	-	-
ISET0	-	-	-	-	-	-	-	-	-	-	-	-
ISET1	-	-	-	-	-	-	-	-	-	-	-	-
RESET	-	-	-	-	-	-	-	-	-	-	-	-
VDET	-	700	0.004	-	-	-	-	-	-	-	-	-

- **Numbers used to size cables are "nominal" at the end of detector life**
  - Estimate based on current prototype electronics
- **Current quoted above is for Two modules in parallel**
  - B-Layer modules have approximately 30% more dissipation
- **Cable Chain out to Racks has been sized and is being reviewed**
- **Cable Performance requirements have not been considered**
  - Capacitance, noise rejection, EMI
  - performance of 140m chain
  - Impact on performance due to connectors
- **System test of full length cables with flex planned for summer 99**

Cable Plant

- **Cables have been sized and connectors selected for prototype cable chain**
- **Cables selected based on local optimizations, e.g. mass, voltage drop**

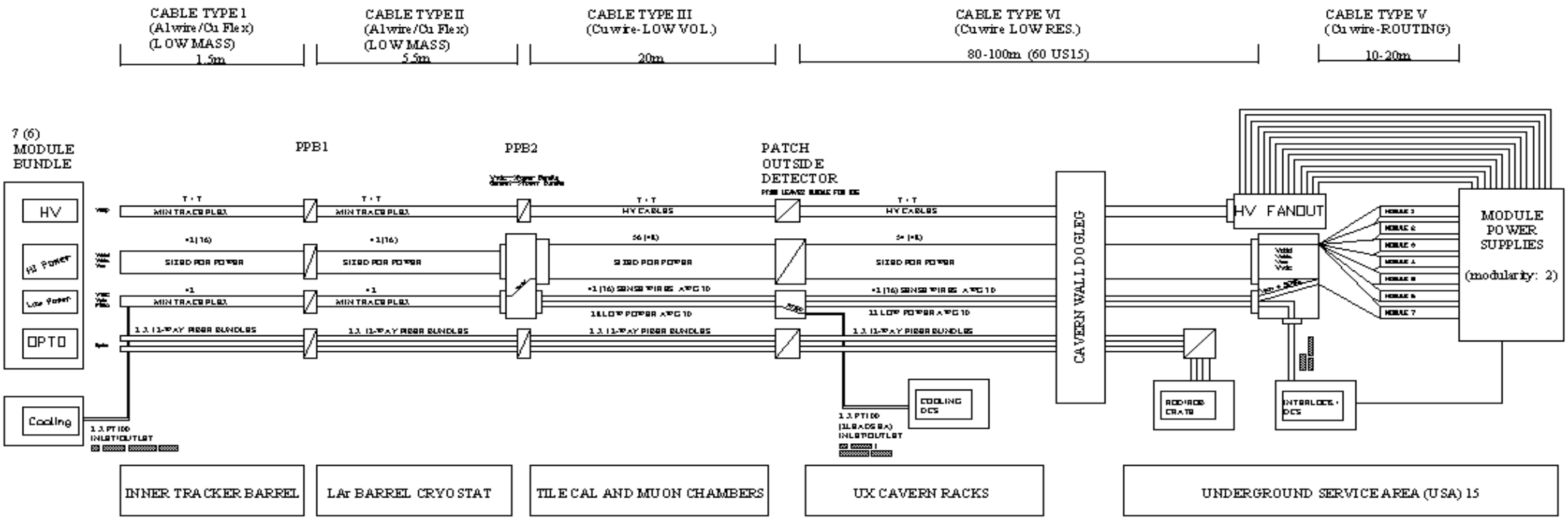

Worst Case Routing to the Racks (USA15)

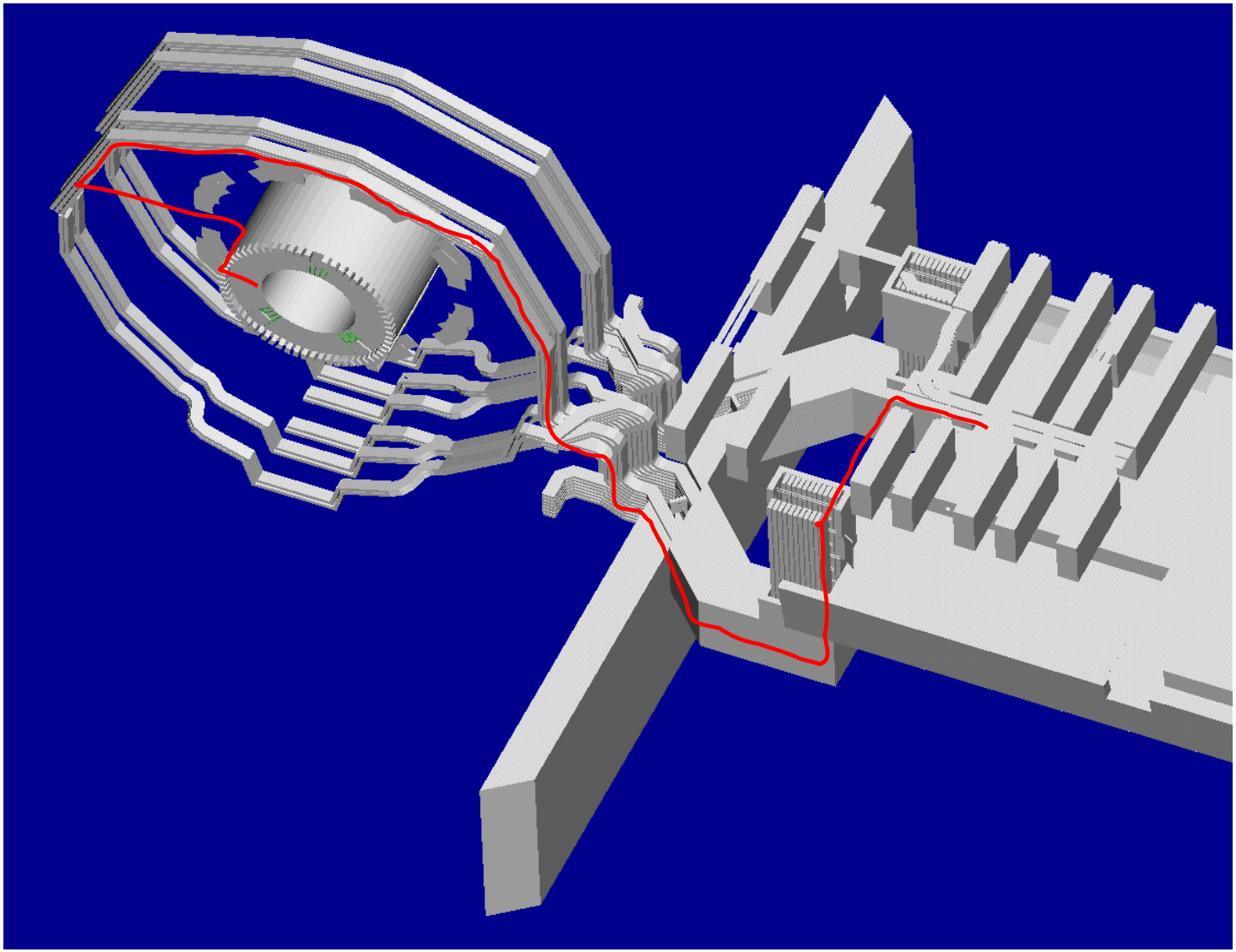

Conventional Cables

TYPE III (7 Module) (ΔV nominal 0.25V/20m)

Cable	Circuit Name	Material/ Area for Nom ΔV mm^2	Nearest AWG	Trace Width mm	Conductor Area mm^2	ΔV	quantity	OD or Thickness mm	Width mm	PF = 2 Area mm^2	TYPE 1 Bundle Summary Packing Factor 2		
HV		*Copper Wire*			Cu						Width	Thickness	**Area**
	VDET	-					7	1.00	1.00	14.00	7	2	**14**
Hi Power		*Copper Wire*			Cu						56 Cables, 28 pairs 16AWG and 28 pairs 14AWG wire twisted pair.		
	VDD		14	-	1.9300	0.272	14	2.39	2.39	159.94			
	VDDA		16	-	1.2300	0.303	14	1.94	1.94	105.38			
	VCC		14	-	1.9300	0.258	14	2.39	2.39	159.94			
	VVDC		16	-	1.2300	0.051	14	1.94	1.94	105.38		**Area:**	**530.64**
Low Power		*Copper Wire*			Cu								
	VPIN	-	30	-		-	14	0.31	0.31	2.60	70 Cables each 0.305mmOD, 30AWG wire, likely twisted pair		
	SENSE	-	30	-		-	42	0.31	0.31	7.81			
	ISET0	-	30	-		-	14	0.31	0.31	2.60			
	ISET1	-	30	-		-	14	0.31	0.31	2.60			
	RESET	-	30	-		-	14	0.31	0.31	2.60			
	PT1000 Module	-	30	-		-	14	0.31	0.31	2.60			**Area**
	PT1000 Cooling	-	30	-		-	0	0.31	0.31	0.00			**41.68**
OPTO		12-way Bundle									Width	Thickness	**Area**
	Fiber bundle			-	-	-	2	0.32	3.06	1.96	3.06	0.64	**1.96**

TYPE IV (7 Module) (ΔV nominal 0.50V/100m)

Cable	Circuit Name	Material/ Area for Nom ΔV mm^2	Nearest AWG	Trace Width mm	Conductor Area mm^2	ΔV	quantity	OD or Thickness mm	Width mm	PF = 2 Area mm^2	TYPE 1 Bundle Summary Packing Factor 2		
HV		*Copper Wire*			Cu						Width	Thickness	**Area**
	VDET	-					7	1.00	1.00	14.00	7	2	**14**
Hi Power		*Copper Wire*			Cu								
	VDD		10	-	4.7400	0.554	14	3.51	3.51	344.96	54 Cables, 14 pairs each 12 and 10 AWG wire likely twisted pair.		
	VDDA		12	-	2.9800	0.626	14	2.86	2.86	229.03			
	VCC		10	-	4.7400	0.525	14	3.51	3.51	344.96			
	VVDC		12	-	2.9800	0.104	14	2.86	2.86	229.03		**Area:**	**1147.98**
Low Power		*Copper Wire*			Cu								
	VPIN	-	30	-		-	14	0.31	0.31	2.60	70 Cables each 0.305mmOD, 30AWG wire, likely twisted pair		
	SENSE	-	30	-		-	42	0.31	0.31	7.81			
	ISET0	-	30	-		-	14	0.31	0.31	2.60			
	ISET1	-	30	-		-	14	0.31	0.31	2.60			
	RESET	-	30	-		-	14	0.31	0.31	2.60			
	PT1000 Module	-	30	-		-	14	0.31	0.31	2.60			**Area**
	PT1000 Cooling	-	30	-		-	0	0.31	0.31	0.00			**41.68**
OPTO		12-way Bundle									Width	Thickness	**Area**
	Fiber bundle			-	-	-	2	0.32	3.06	1.96	3.06	0.64	**1.96**

US 15 Elevation

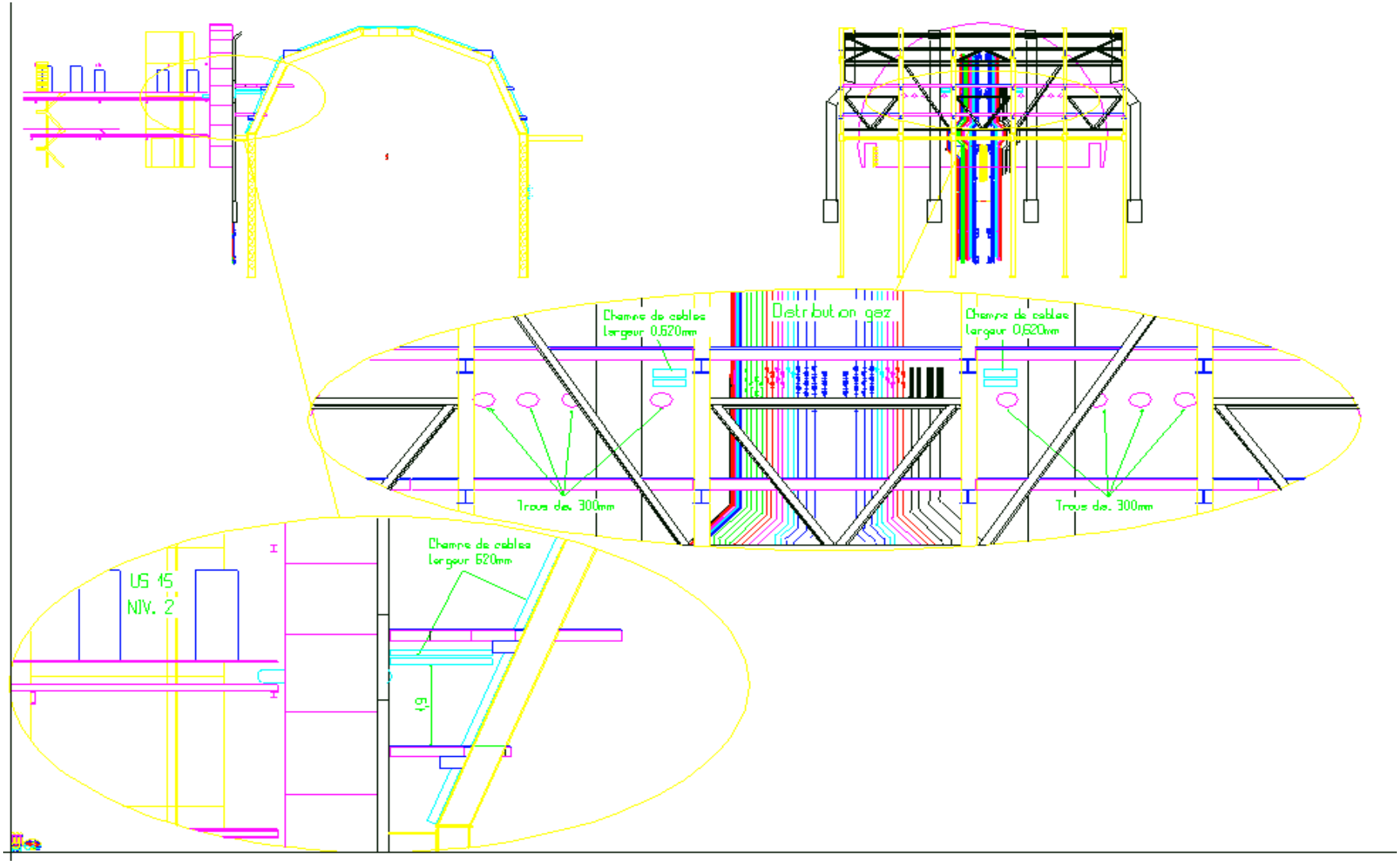

A brief look at external Routing

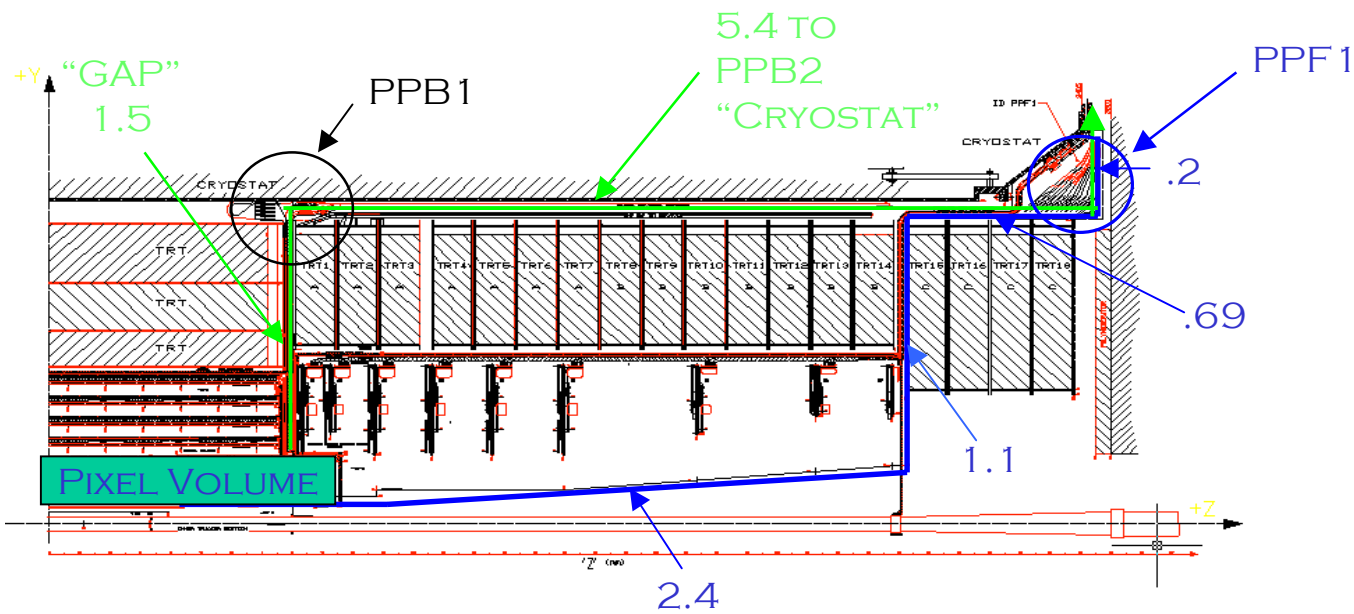

B-Layer routing is shown in Blue, the rest of the Pixel services are routed along the green path.

- Power cables change size at PPB1 and PPF1 from "Type 1" to "Type 2"
- Type 1 is sized for the 1.5m run from inside Pixel Volume to PPB1 through "GAP".
- Type 2 is sized based on only 2.7m of the 5.4m run from PPB1 to PPB2 along "Cryostat".
- These regions were deemed most critical for both space and dissipation reasons

Power cables were sized based on acceptable voltage drops for the given lengths

B-Layer cables are Type 1 cables out to PPF1

Low Mass Cable Definition

TYPE I (7 Module) (ΔV nominal 0.4V/1.5m)

Cable	Circuit Name	Material/ Area for Nom ΔV mm^2	Nearest AWG	Trace Width mm	Conductor Area mm^2	ΔV	quantity	OD or Thickness mm	Width mm	PF = 2 Area mm^2	TYPE 1 Bundle Summary Packing Factor 2		
HV		*Copper Flex*			Cu						Width	Thickness	**Area**
	VDET	-		0.5	0.0125		14	0.10	3.00	8.40	21	0.4	**8.4**
Hi Power		*Aluminum Wire*			Al								
	VDD		26	-	0.1550	0.415	14	1.07	1.07	32.06	42 Cables, each 0.51mmOD,		
	VDDA		26	-	0.1550	0.295	14	1.07	1.07	32.06	likely twisted pair.		
	VCC		26	-	0.1550	0.393	14	1.07	1.07	32.06		**Area:**	**192.34**
Low Power		*Copper Flex*			Cu								
	VVDC	-		0.5	0.0125	0.373	14	0.10	1.00	2.80			
	VPIN	-		0.5	0.0125	-	14	0.10	1.00	2.80			
	ISET0	-		0.5	0.0125	-	14	0.10	1.00	2.80			
	ISET1	-		0.5	0.0125	-	14	0.10	1.00	2.80			
Flex Foil	*RESET*	-		0.5	0.0125	-	14	0.10	1.00	2.80			
0.025	*PT1000 Module*	-		0.5	0.0125	-	14	0.10	1.00	2.80	Width	Thickness	**Area**
mm	*PT1000 Cooling*	-		0.5	0.0125	-	0	0.10	1.00	0.00	21	0.4	**8.40**
OPTO		12-way Bundle									Width	Thickness	**Area**
	Fiber bundle			-	-	-	2	0.32	3.06	1.96	3.06	0.64	**1.96**

TYPE II (7 Module) (ΔV nominal 0.4V/5.4m)

Cable	Circuit Name	Material/ Area for Nom ΔV mm^2	Nearest AWG	Trace Width mm	Conductor Area mm^2	ΔV	quantity	OD or Thickness mm	Width mm	PF = 2 Area mm^2	TYPE 1 Bundle Summary Packing Factor 2		
HV		*Copper Flex*			Cu						Width	Thickness	**Area**
	VDET	-		0.5	0.0125		14	0.10	3.00	8.40	21	0.4	**8.40**
Hi Power		*Aluminum Wire*			Al						42 Cables, 7pairs each of		
	VDD		20	-	0.6150	0.376	14	1.54	1.54	66.40	20,22and 20AWG wire twisted		
	VDDA		20	-	0.6150	0.267	14	1.54	1.54	66.40	pair.		
	VCC		20	-	0.6150	0.357	14	1.54	1.54	66.40		**Area:**	**398.43**
Low Power		*Copper Flex*			Cu								
	VVDC	-		0.5	0.0125	1.344	14	0.10	1.00	2.80			
Flex Foil	*VPIN*	-		0.5	0.0125	-	14	0.10	1.00	2.80			
	ISET0	-		0.5	0.0125	-	14	0.10	1.00	2.80			
	ISET1	-		0.5	0.0125	-	14	0.10	1.00	2.80			
	RESET	-		0.5	0.0125	-	14	0.10	1.00	2.80			
0.025	*PT1000 Module*	-		0.5	0.0125	-	14	0.10	1.00	2.80	Width	Thickness	**Area**
mm	*PT1000 Cooling*	-		0.5	0.0125	-	0	0.10	1.00	0.00	21	0.4	**8.40**
OPTO		12-way Bundle									Width	Thickness	**Area**
	Fiber bundle			-	-	-	2	0.32	3.06	1.96	3.06	0.64	**1.96**

Circuit Sensitivity

Circuit	Current (Max)	Current (USED)
Vcc	0.75	0.6
Vddd	1.5	0.75
Vdda	0.6	0.45
PT100	0	0
Optical link	1.00E-05	1.00E-05
VCSEL	1.00E-05	1.00E-05
Bias Voltage	2.00E-03	1.60E-03

Sensitivity to changes in parameters

- **Current/Power**
  - slight sensitivity for small changes
    - <10% (+/-) Equivelant to 1 cable size increase for 1 trace
- **Number of circuits**
  - Has increased to allow for control of Opto's
  - Sense wires only proceed into PPB2
- **Noise Rejection**
  - Twisted pair doubles wire area
    - 40% increase from before.
- **Fiber Modularity**
  - Currently Bundles come modulo 12 which does not easily divide into 13 X 3
    - possible 5% increase

Bundle indicative of service cross section (Type I, II)

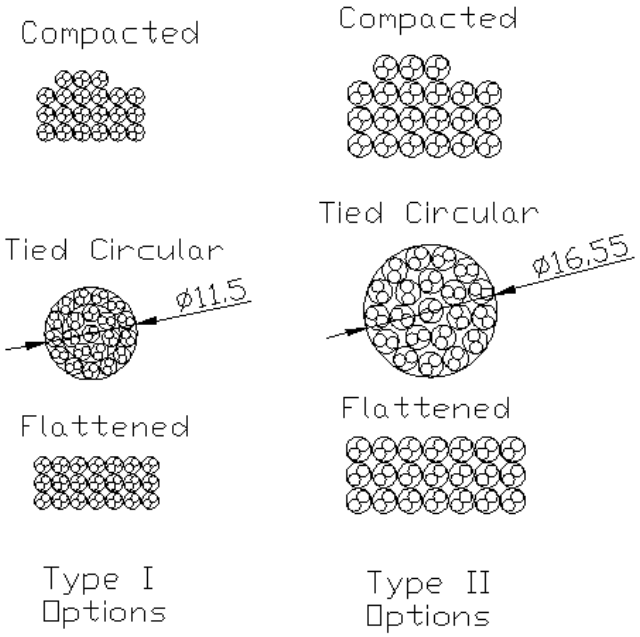

Module services may up to double in face area from current best estimates.

Full scale testing of module power chain is necessary to determine the extent to which they may increase

Cable Bundles as Defined in Pixel Volume

Compacted

Tied Circular

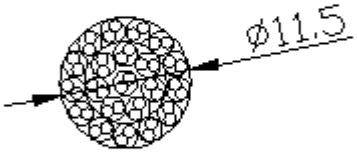

Flattened

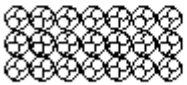

Type I
Options

Same bundle, with aspect ratio modified

- **Bundles do not account for Phi Regrouping**
  - Bundles will need to be integrated and bunched in GAP region into 8 angular regions for external routing
- **Barrel Services are routed on the outside of the forward frame**
  - Bundles have services for up to 7 modules
- **Disk Services are routed inside of forward frame**
  - This has changed due to layout changes, but is still relevant and illustrative

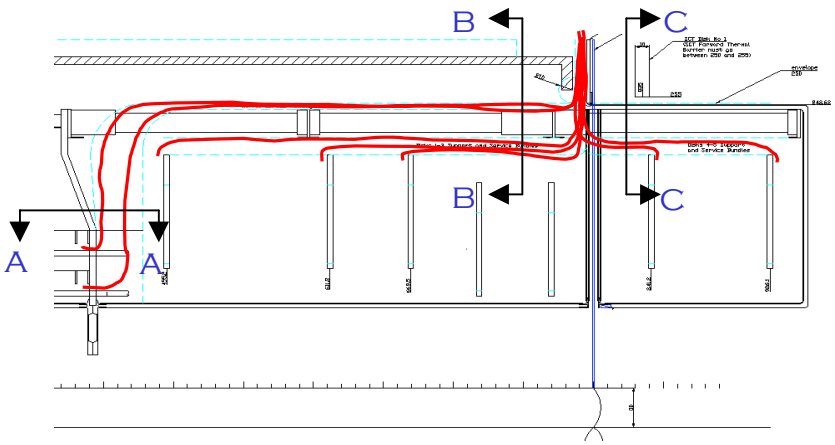

Packing Factor vs. Space Available

Packing Factor 2

PF=2 ==>9.5 X 19 = 180.5
PF~0 ==>5.85 X 16.1 = 94.2

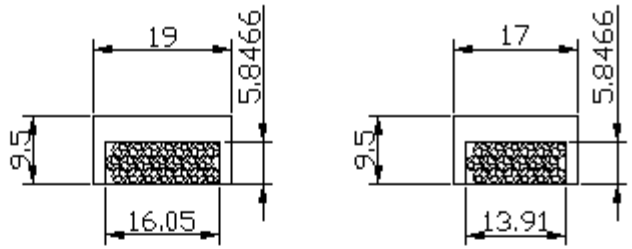

NASA Standard
Wire harness Ø

42 Wires
21 Twisted Pair
7 Module Bundle

36 Wires
18 Twisted Pair
6 Module Bundle

Pi*D^2 /4 = 3.14*(11.5)^2/4 = 103.9
11.5 = [(4/3.14) * (21) * (2.14)^2 * (1.08)]^(1/2)
NASA HarnessØ = √[(4/π)*(number of wires)*(wire dia)^2*(weighting factor)]

Weighting Factor ~ 1.08 on top of circle to square conversion

- We should standardize on a way to size cable bundles so that quoted numbers are meaningful
- Bundles should be sized and free space quoted
- Packing Factors are more appropriate for building construction than satellite construction--used for circular conduit and fire codes
- Propose This as an alternative

Sections of "routed" Cables

Services outside of Frame have 10% circumferential margin for uniphase tube packing.

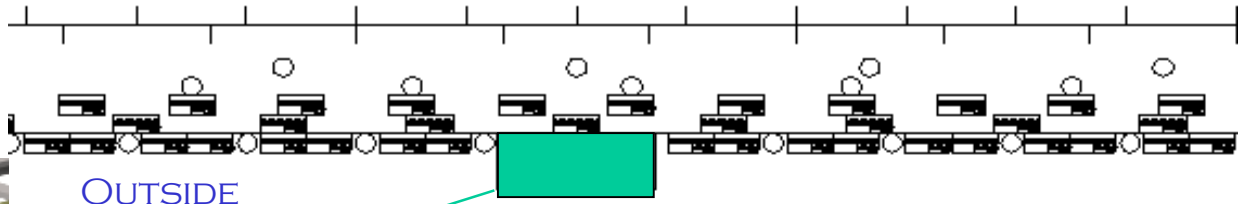

Outside Frame

15 X 40 support

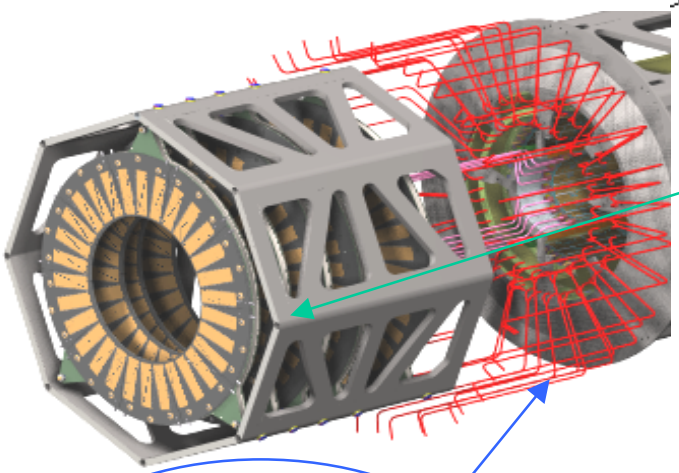

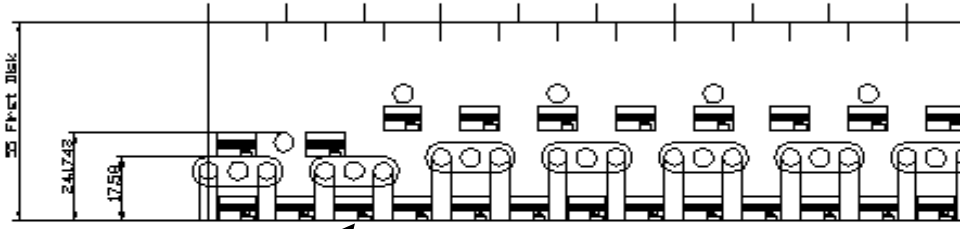

Barrel Layer 2

Cable width limited by pitch

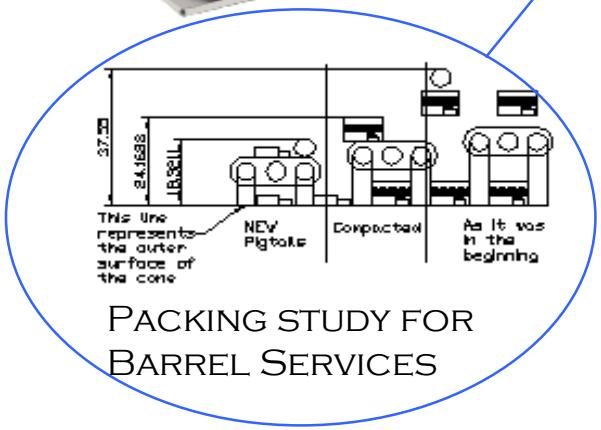

Packing study for Barrel Services

Services exiting barrel affect first disk position.

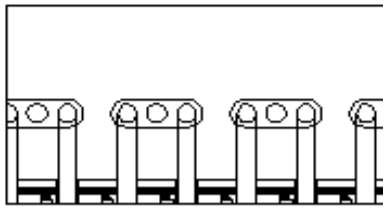

Barrel Layer 1

Service Packing inside frame

Space Frame was baseline for cable routing

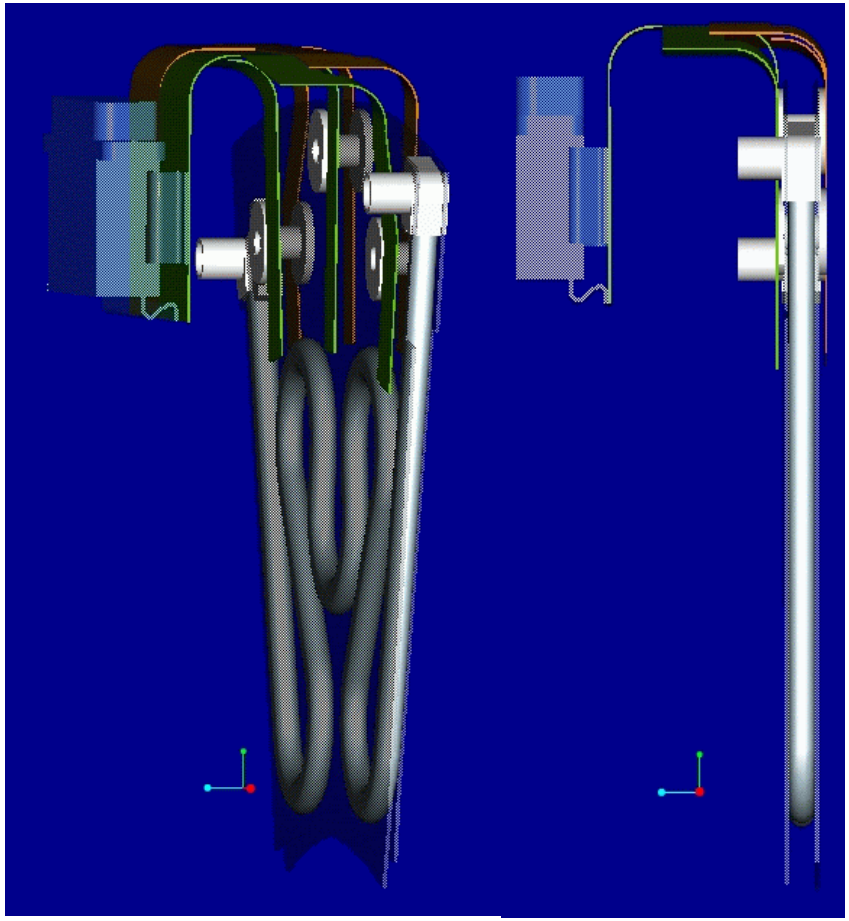

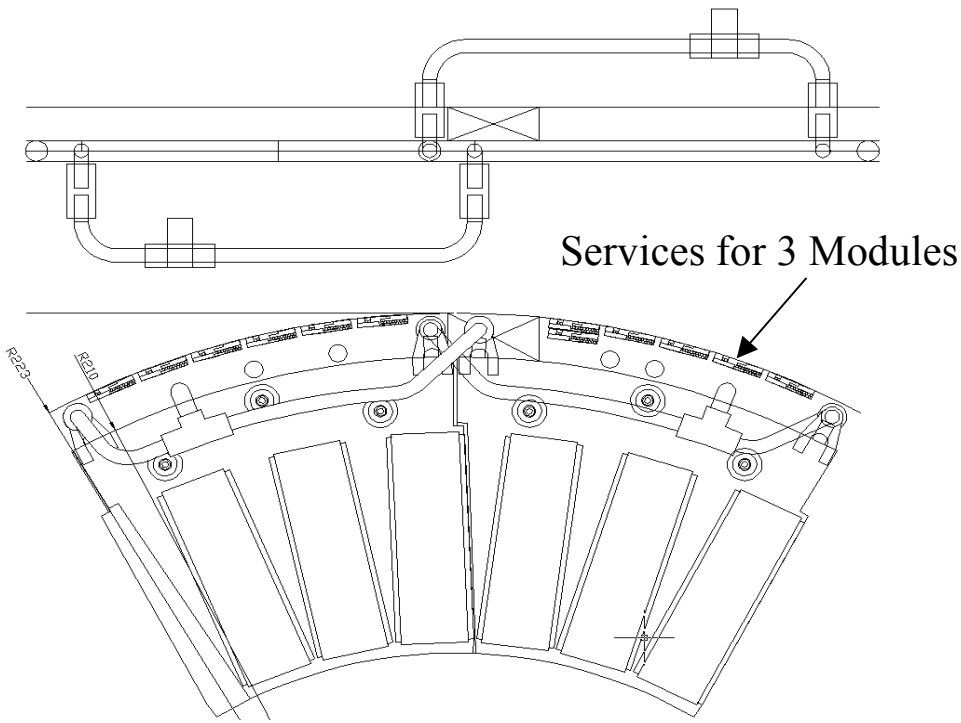

Service/Layout interaction

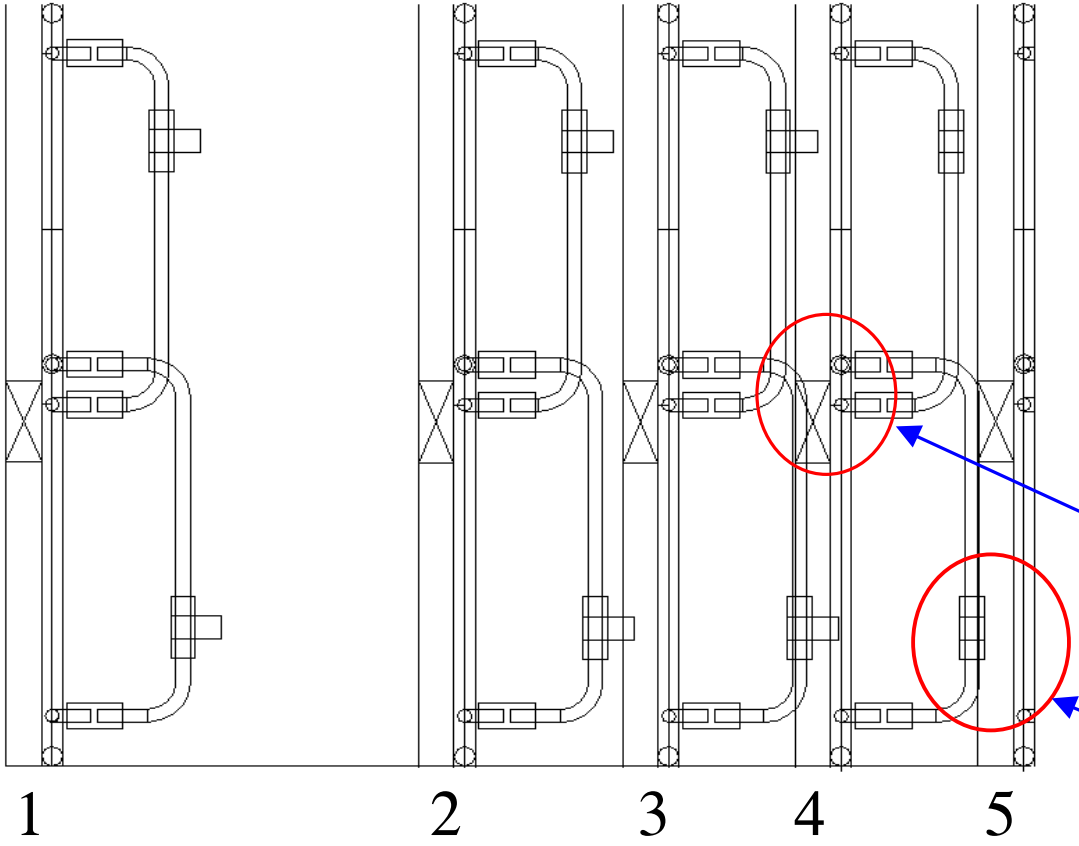

- **Services affect layout by dissallowing tighter spacing of disks**
- **Disks 4/5 are smaller in diameter than 1-3**
- **Disk 5 overhangs SCT, not room to route services in Z**

O.K. due to smaller radius of disk 4

Questionable, likely requires more complex routing to solve what appears to be tight or actually interfering

Services as routed

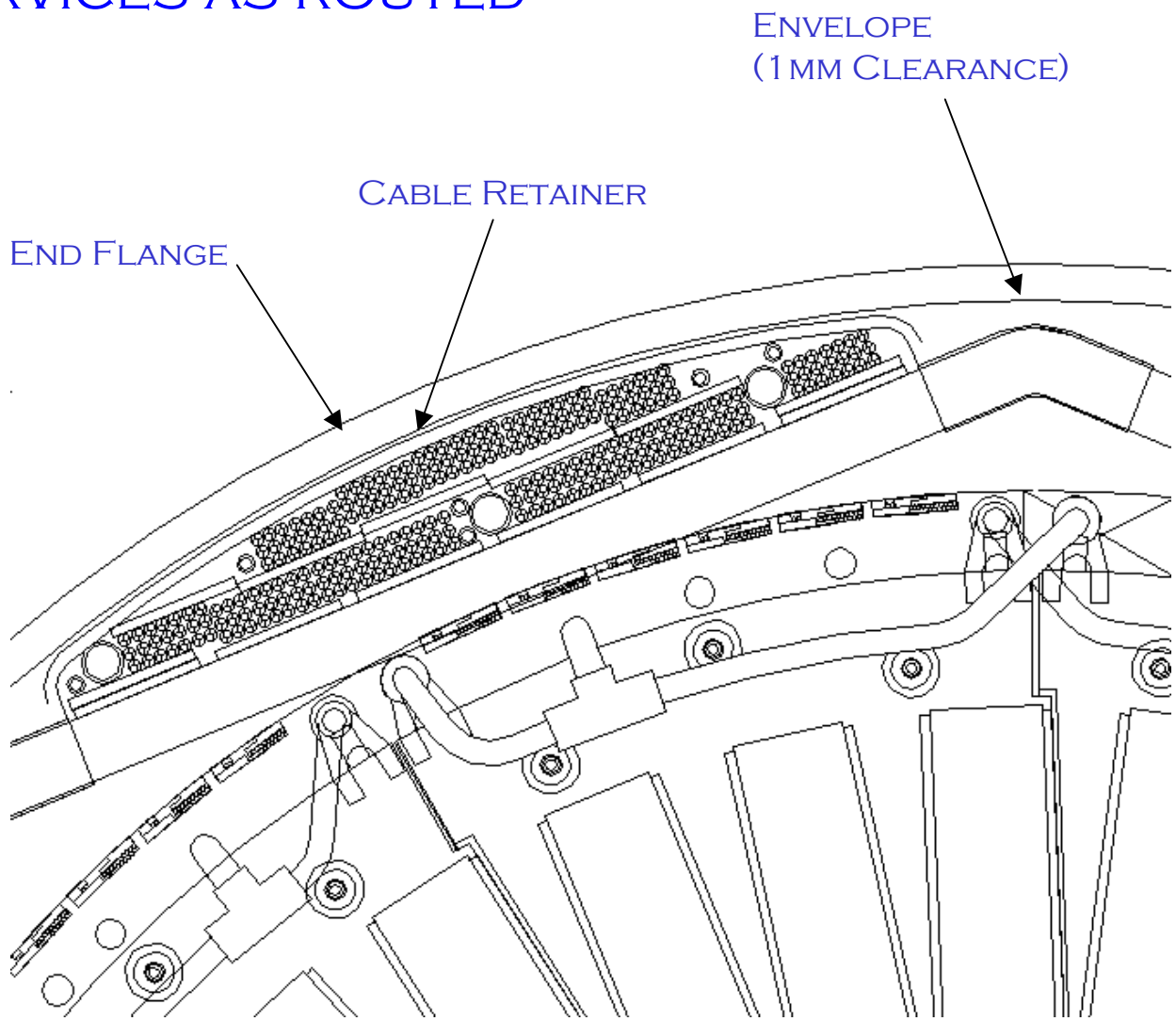

- Disk Manifolds have been laid in
- Service packing laid out for flat panel forward frame
- 3D model has been started with "realistic" manifolding and thoughts to strain relief
- Exit of barrel services from interior of frame need close attention
- Support cone likely to be added to present model (acrylic model)

Connections/Breaks/Termination

Double to Single Sided Flex

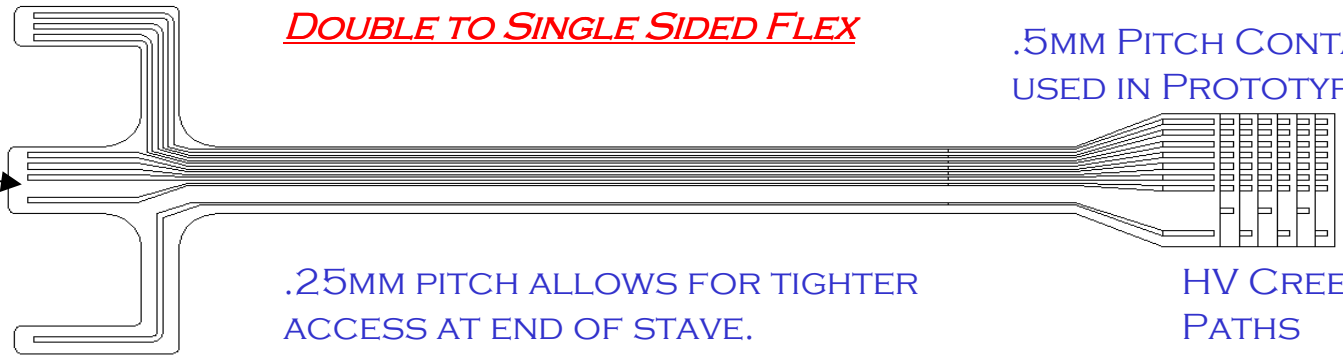

Double sided cable Attaches here

Arms fold over to pick up top

HV

.5mm Pitch Contact used in Prototype

.25mm pitch allows for tighter access at end of stave.

HV Creep Paths

Up to 90 connections must be made at each end of every stave

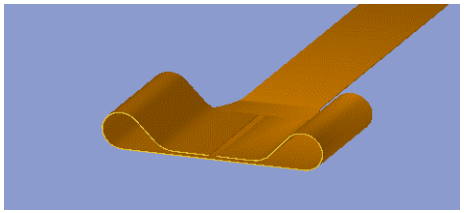

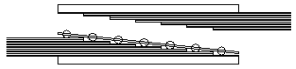

Ball Grid Array Contact Pad

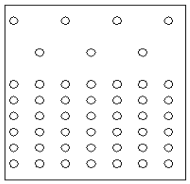

Semi-permanent tube connector

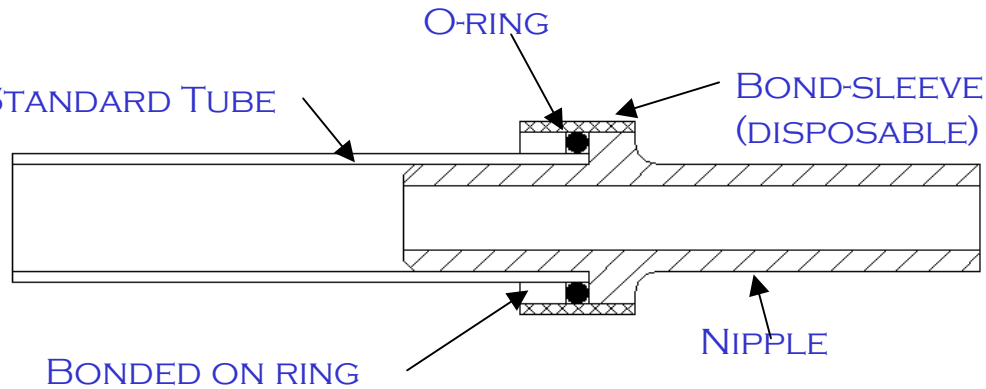

Remaining Issues

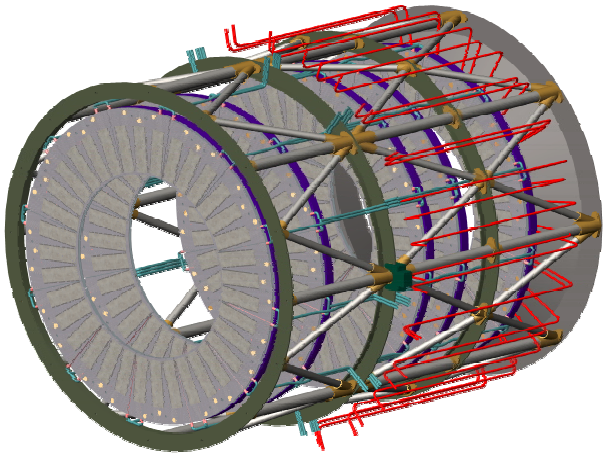
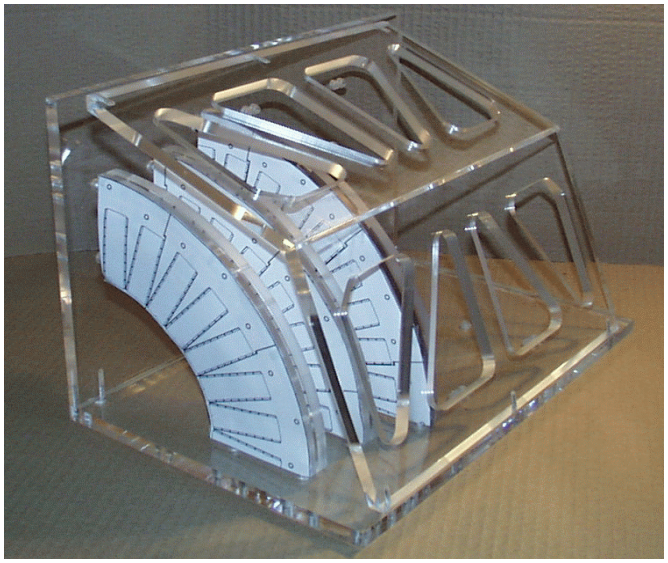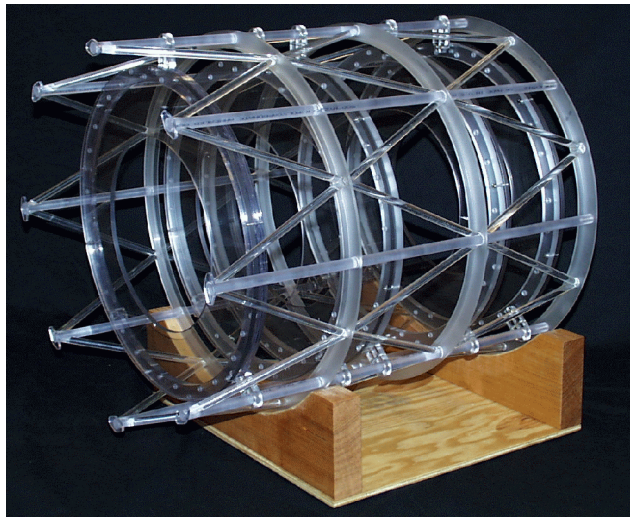
- **Patch Panels (!)**
  - Prototype of 1/4 tracker underway in Indiana and UC London
- **Routing needs to be re-done in 3-D**
  - Cable behaviour hard to capture in CAD
  - 3D non structural scale models have has been constructed
  - Route services on model, feedback into 3-D CAD
- **Forces need to be estimated**
  - Cooling tubes will respond to pressure and temperature variations-need to estimate loads
- **Couplings and Strain relief need to be investigated**
  - Assembly and subsequent attachment of services will couple the pixel detector to external detectors.
  - Flexible connections need to be rad-hard-looking at Nickel Bellows
- **Connections need to be Prototyped**
  - Aluminum cabling is not easily connected to
  - Commercial connectors are not desirable at end of Stave