Pixel Detector Installation

March 13, 2001

ATLAS Access Workshop

E. Anderssen, LBNL

Overview

- **Things to Remember**
- **Layout of support scheme and Services**
  - Installation requires new support scheme
  - Implies specific service routing and breaks
- **Installation sequence**
  - Service Termination
  - Key points and ramifications
  - Overall lengths for installation
- **Mockup of Pixel Support Tube is underway**
  - Verification of installation procedure
  - Testing of support and load transfer

Things to Remember

- **Pixel installation must happen at latest possible date**
  - Failure of D-Mill electronics necessitated re-design of detector which was viable with the limited number of modules which will be available by the installation deadline
  - Advancing the installation schedule=less modules
  - Works now with detector following "old" B-layer schedule
- **B-layer is at the smallest possible radius**
  - B-Layer must be clam-shelled to pass flange at end of beam pipe
- **Remainder of detector is *not* clam-shelled**
  - Remainder of detector uses technology already developed–only parametrically scaled
  - Redesign of detector for clam-shelling ~2yr delay
- **Current thinking is to install around installed VI section of Beam-Vacuum**
- **B-Layer installation was required to be consistent with Short Access Configuration**
  - Was tied to old bake-out scenario VI temperature

Pixel Detector

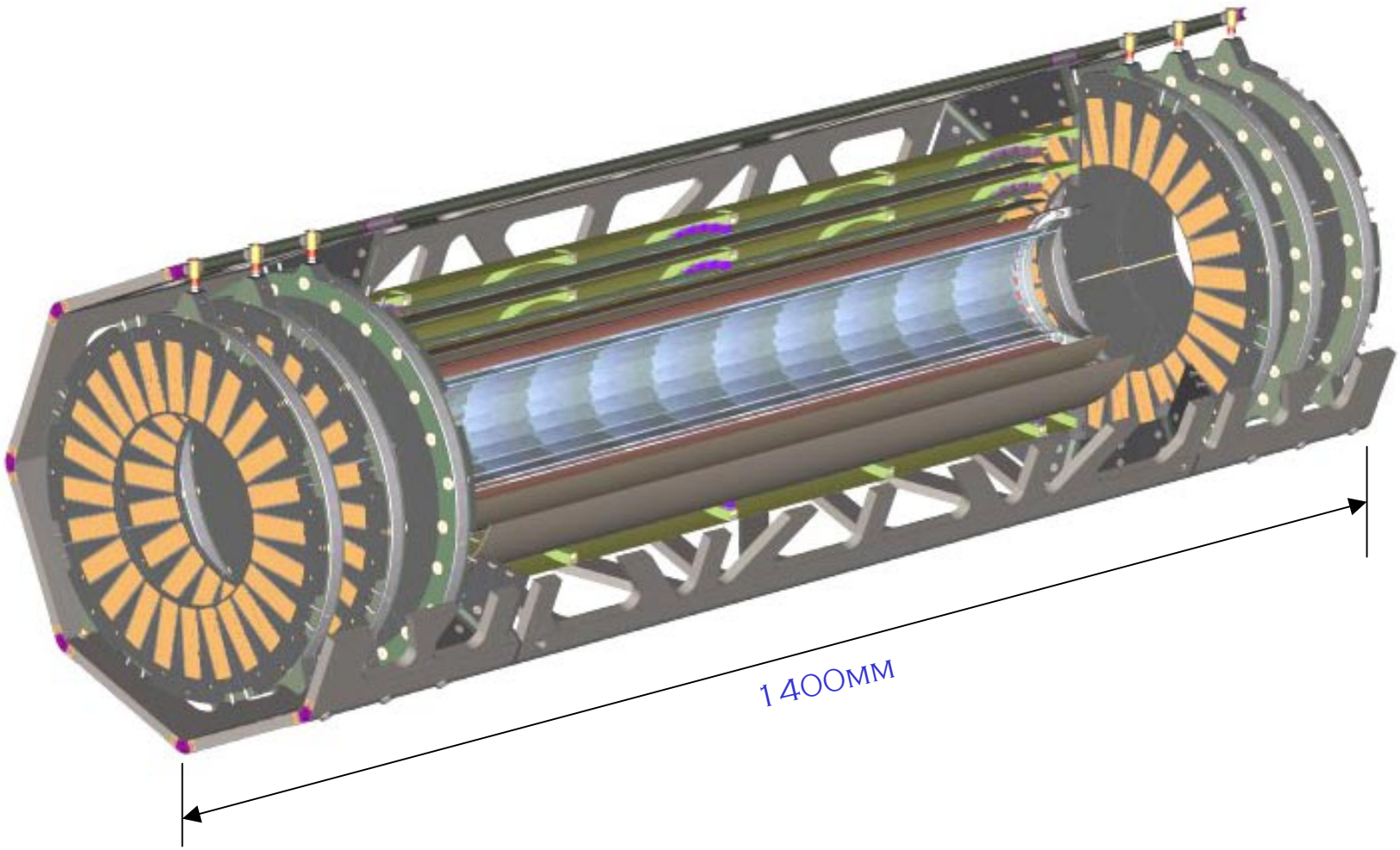

- Frame Length without the Pigtails extending
- Pigtails will extend 370mm on both sides of the detector for a total length of 2.14m

Pixels in Installed position

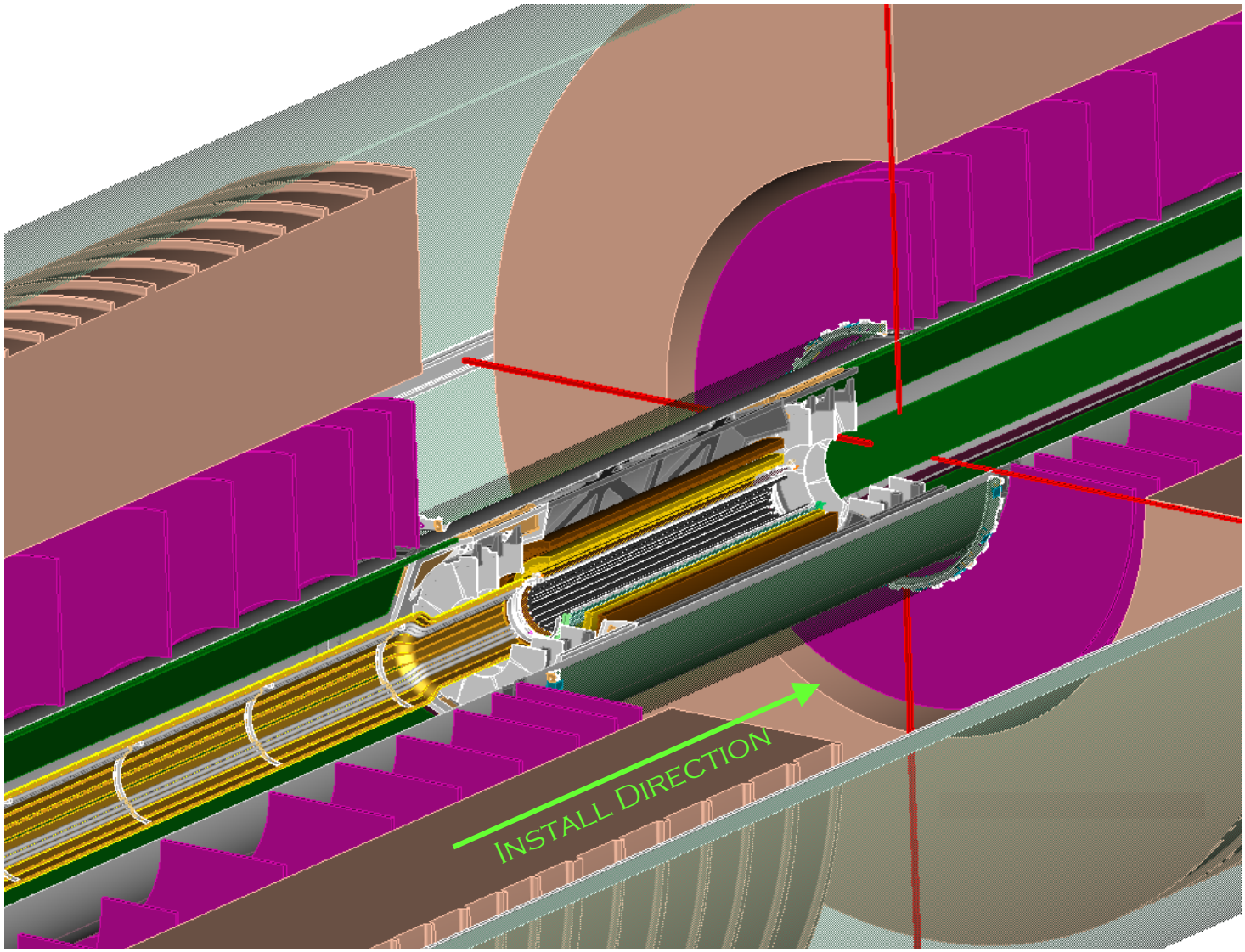

Far-side Pixel Services must pass the Crossed wire beam pipe support at Z=-800

Beam pipe and Barrel ID not shown for clarity

Pixel Detector

General Layout

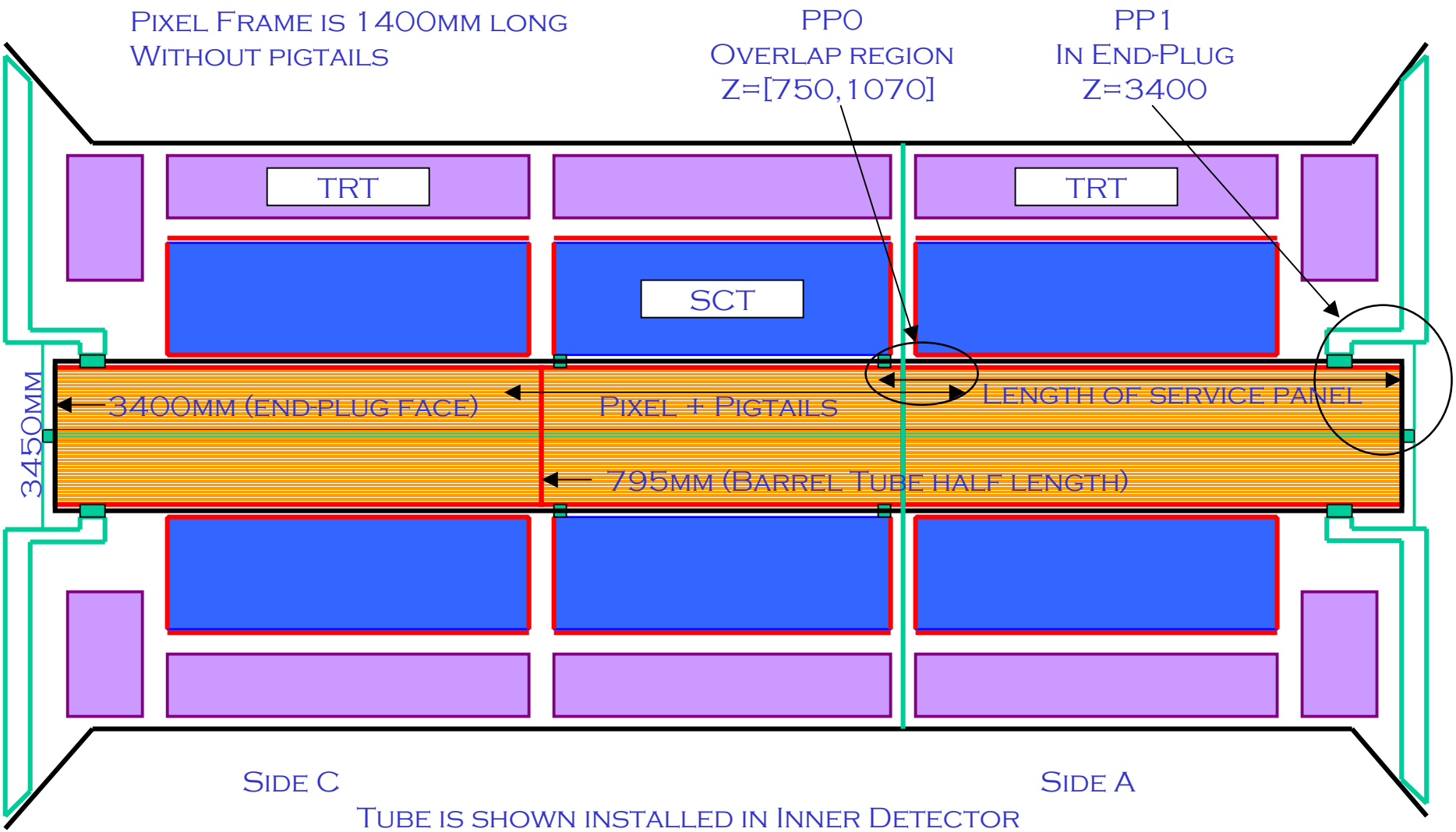

Pixel Support Tube Installed with Barrel ID

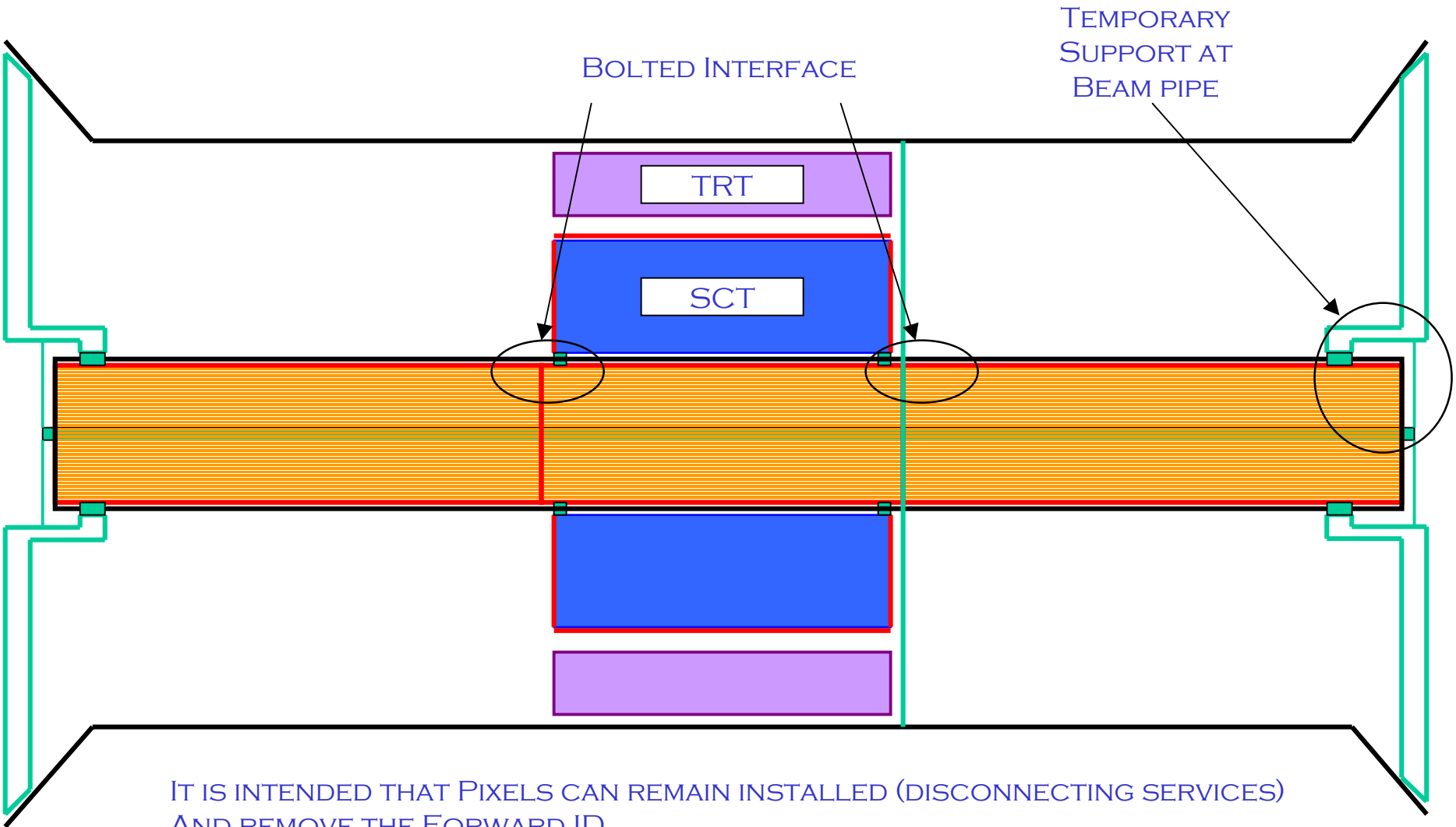

It is intended that Pixels can remain installed (disconnecting services) And remove the Forward ID.

Pixel Detector

Forward ID Installation

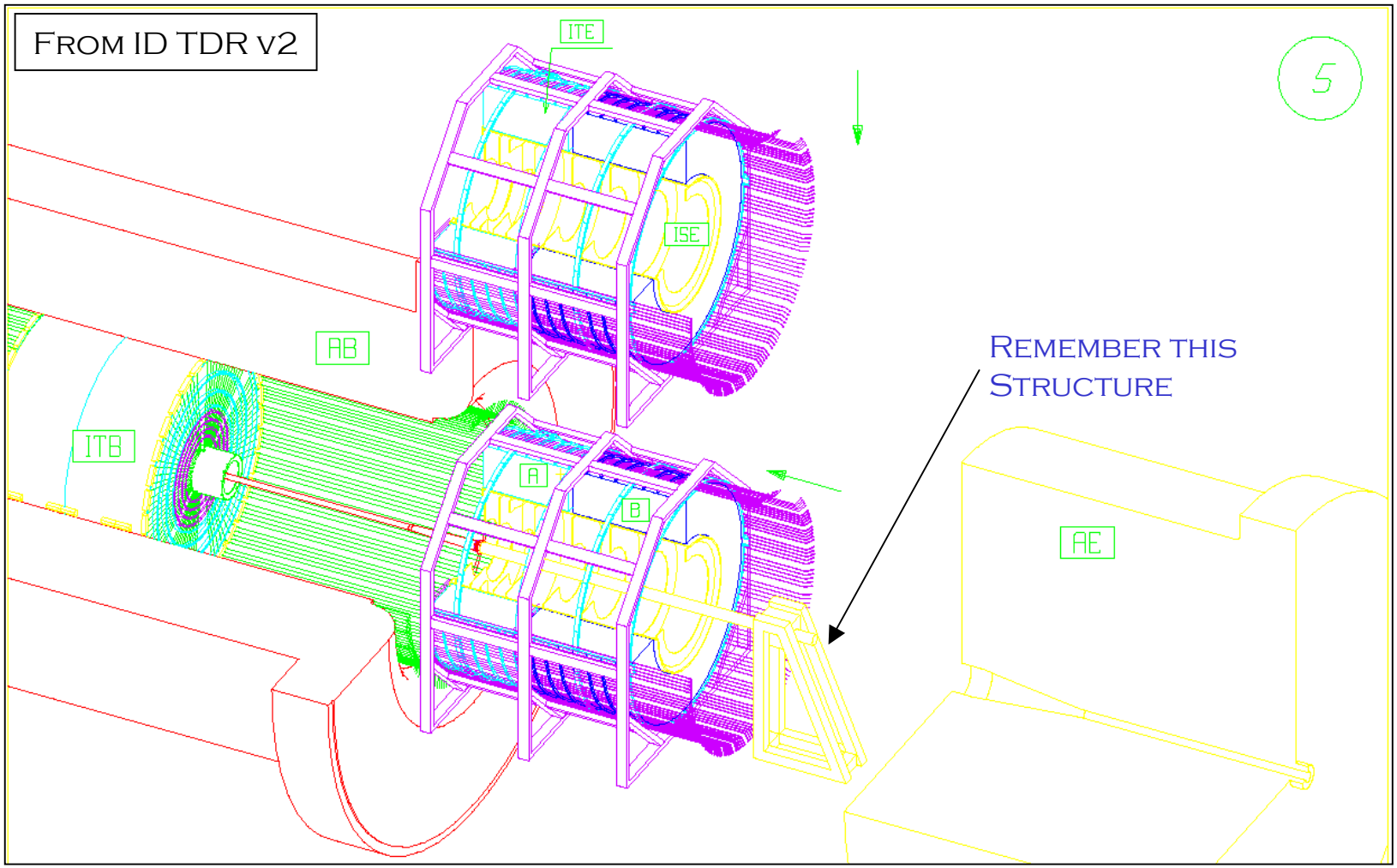

Forward Pixel Support Tube uses same installation scheme

Pixel Detector

Service Breaks in Installed positions

- Breaks at indicated locations are necessary for the assembly kinematics
- Type II Cable is panelized and removable to give access to PPF1
  - PPF1 is accessible after TII cables are removed
  - It is feasible to even access PPB1 without removing Pixels
- **B-Layer services run out Side C only—breaking at the same locations**

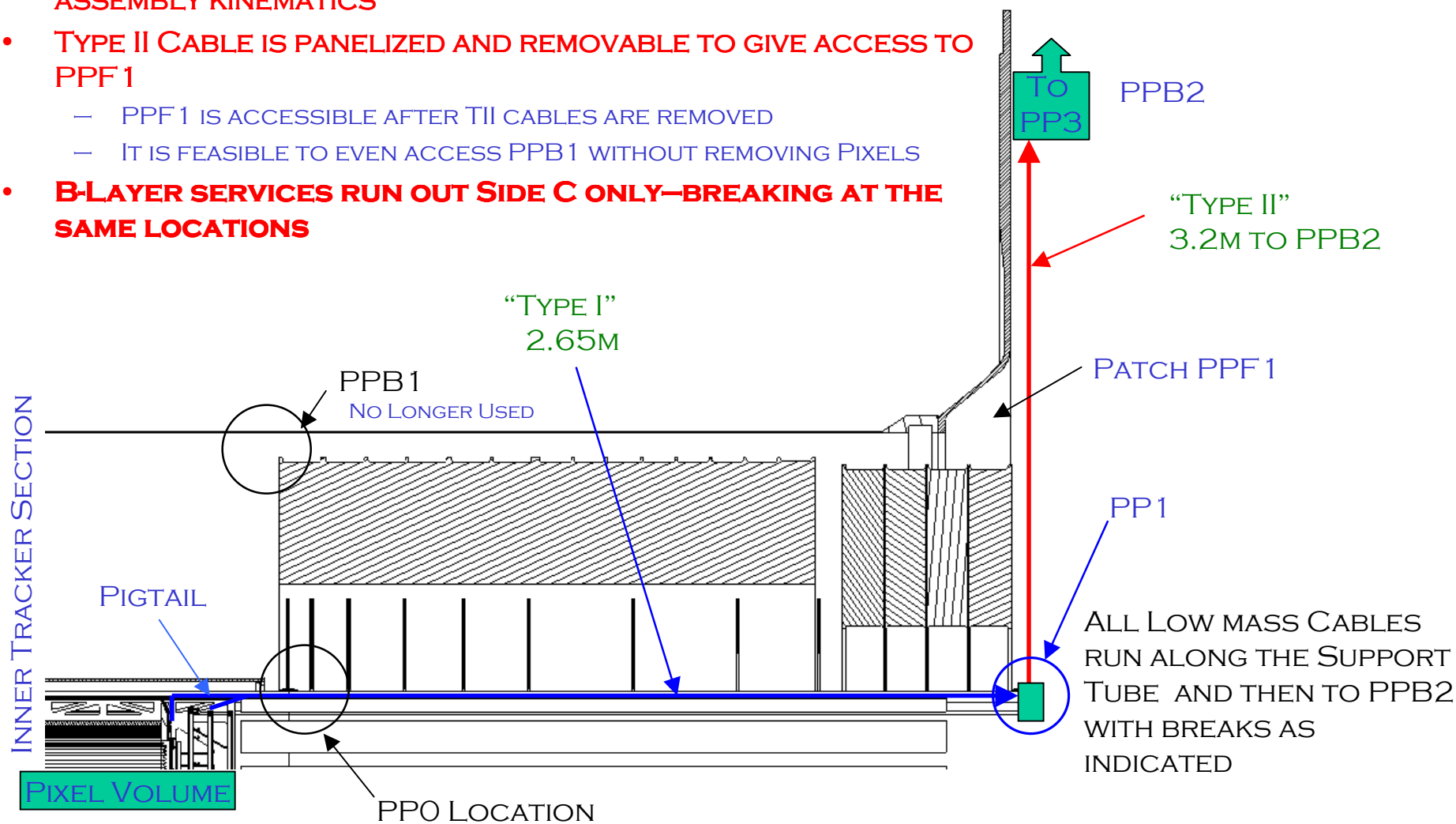

Services Mechanical Support

Structure necessary to support services during installation scheme

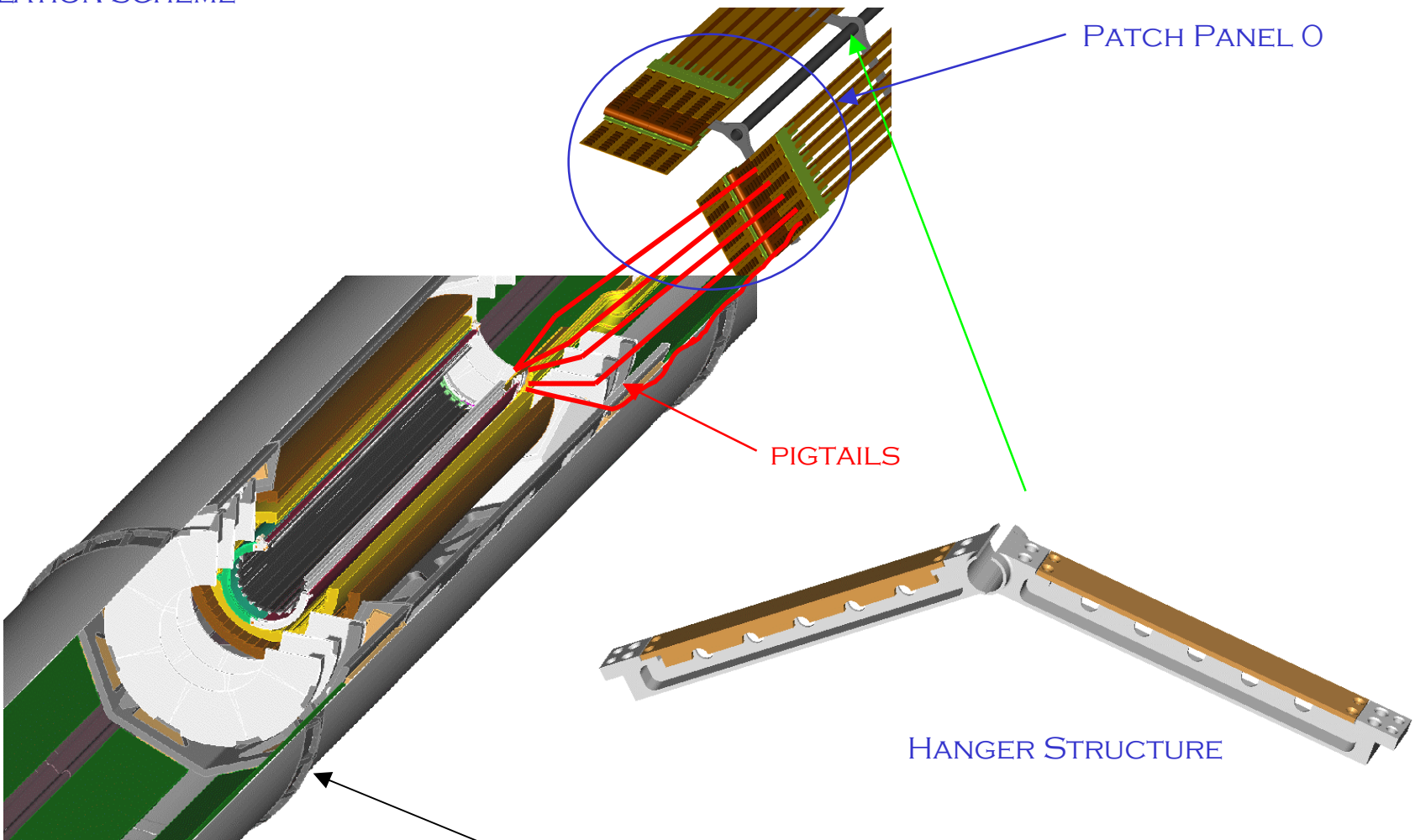

Pixel Detector

PP0 Termination

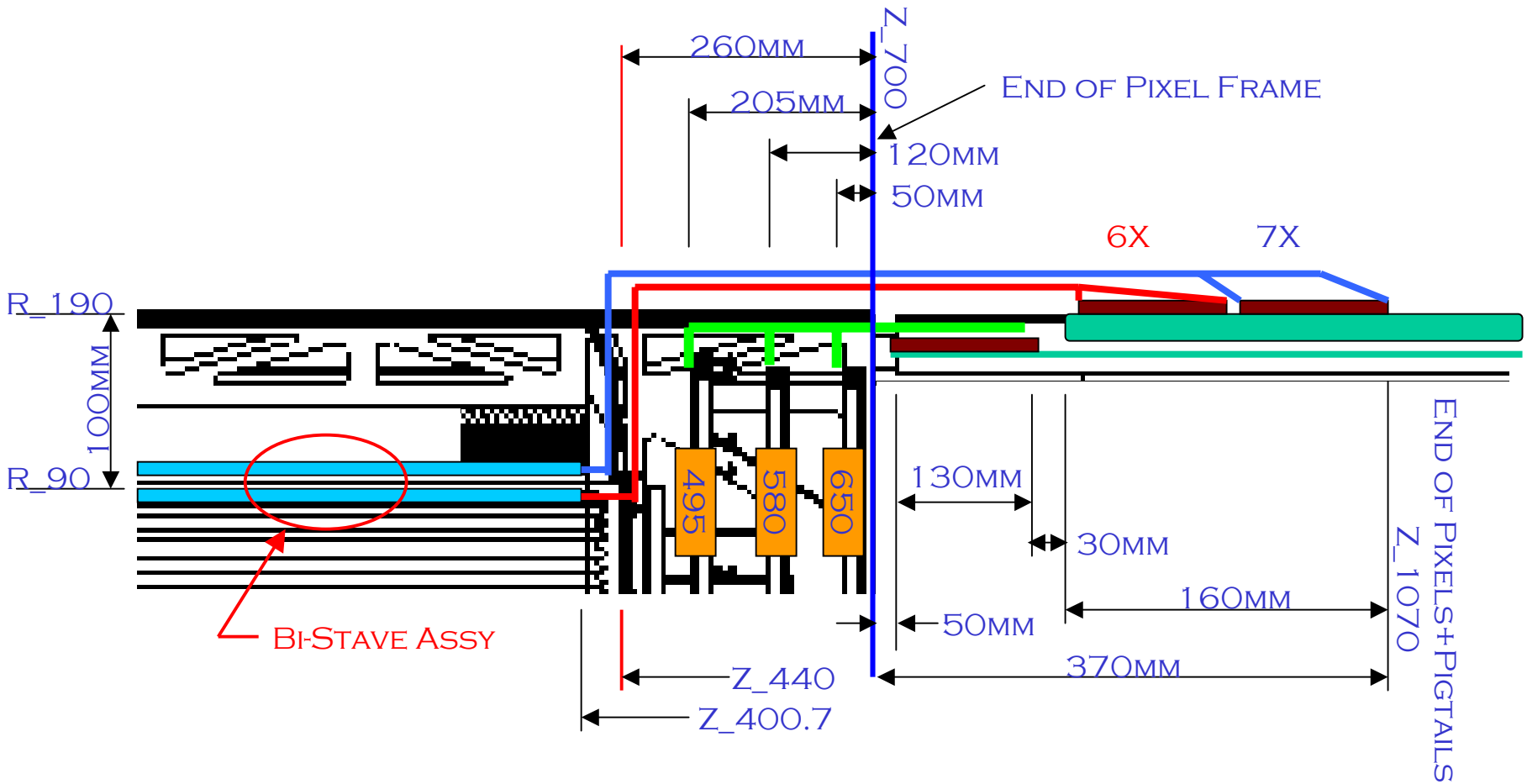

- **Radius of PP0 is approximately 180mm**
- **Starts at Z=750 and goes to Z=1070 (50mm gap between PP0 and Frame)**
- **Built up in Layers—Barrel Layer must "peel back" to give access to disk services**

Far Services are inserted

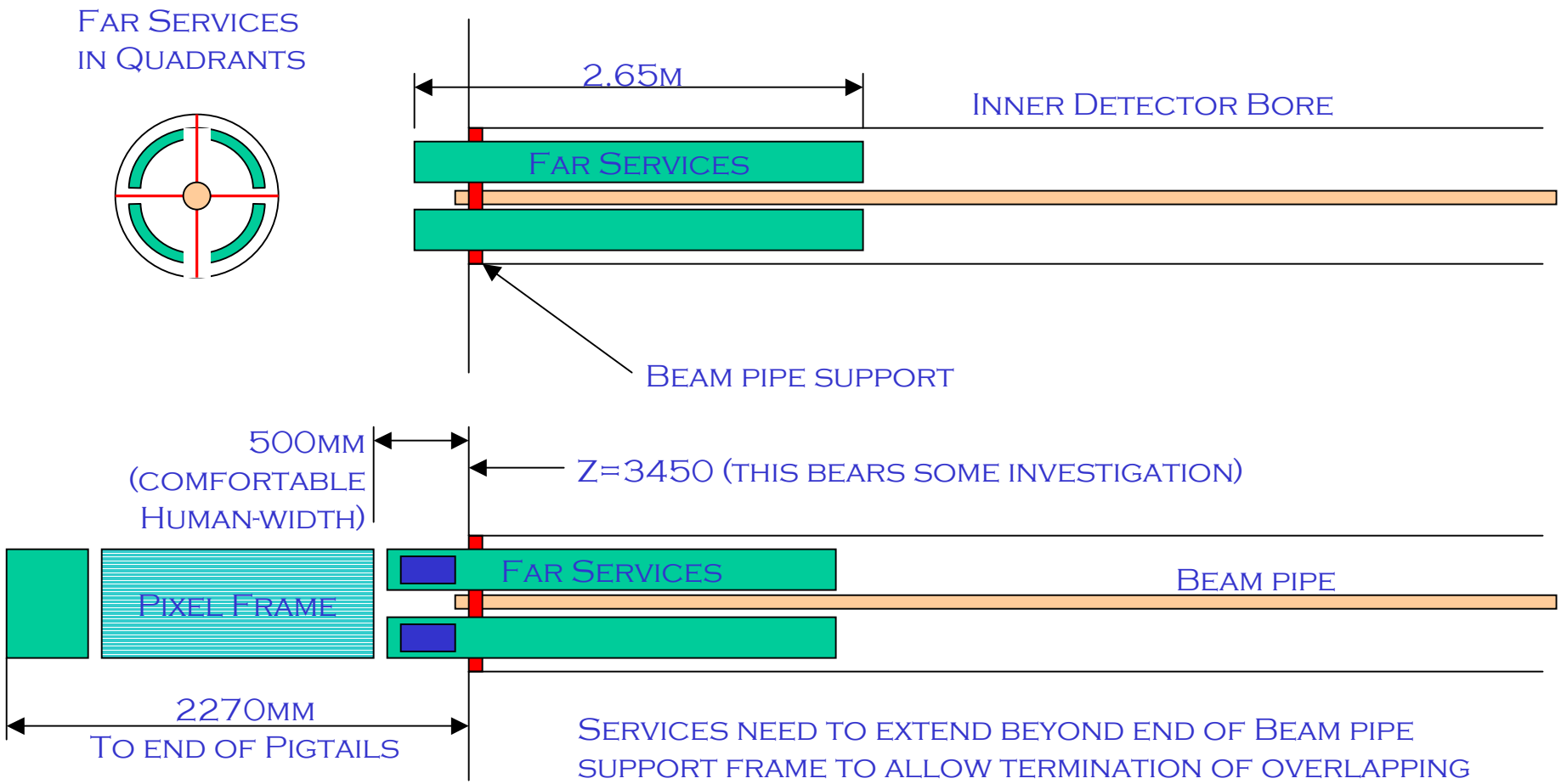

Services need to extend beyond end of Beam pipe support frame to allow termination of overlapping pigtails

Far Services Terminated–Pixels inserted

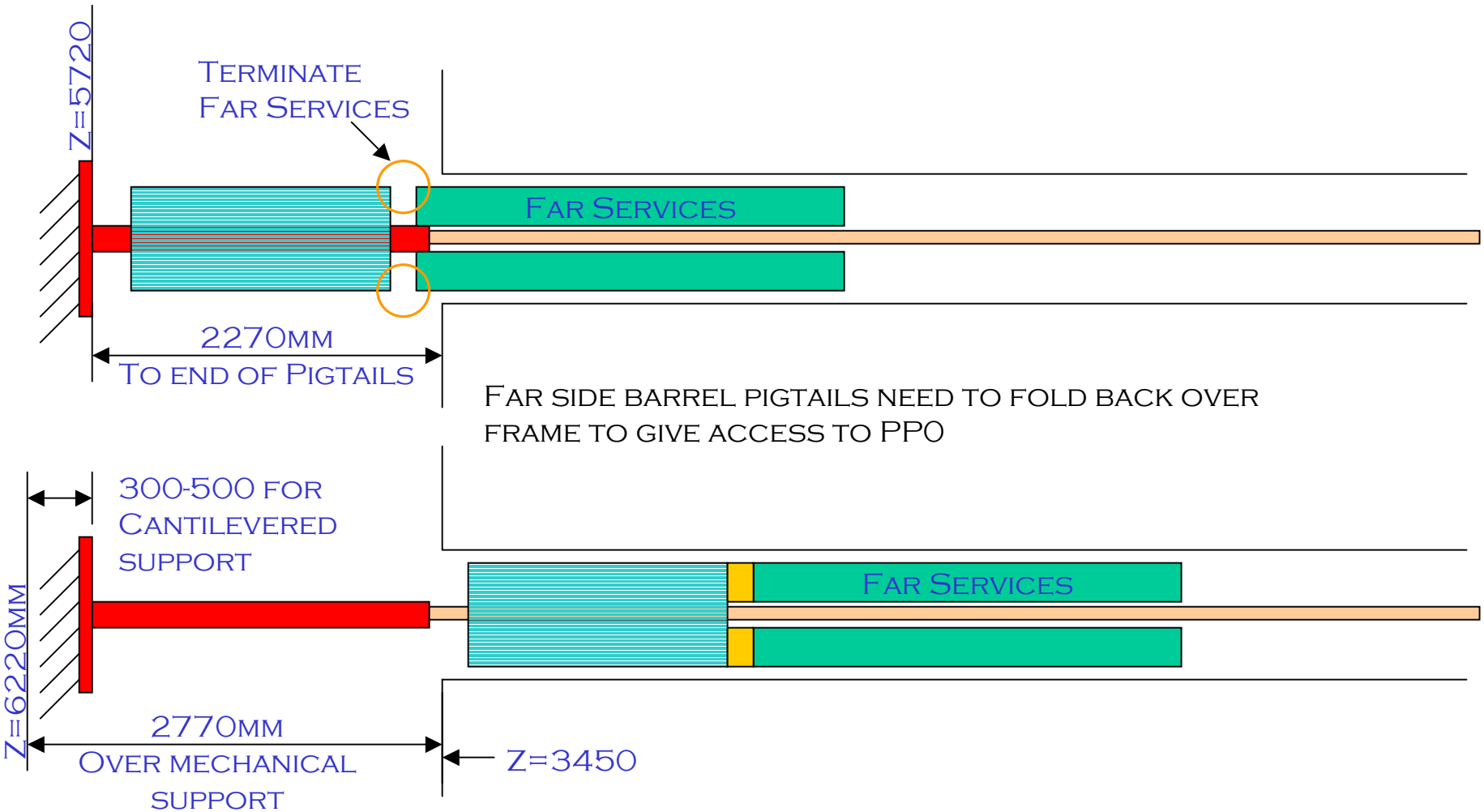

Far side barrel pigtails need to fold back over frame to give access to PP0

Cantilever structure necessary to support beampipe during installation–same as for ID forward installation

Testability of Far Side Services

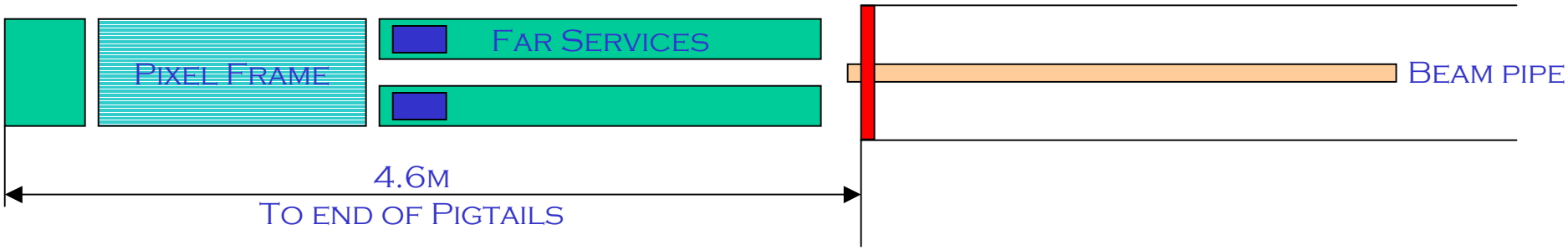

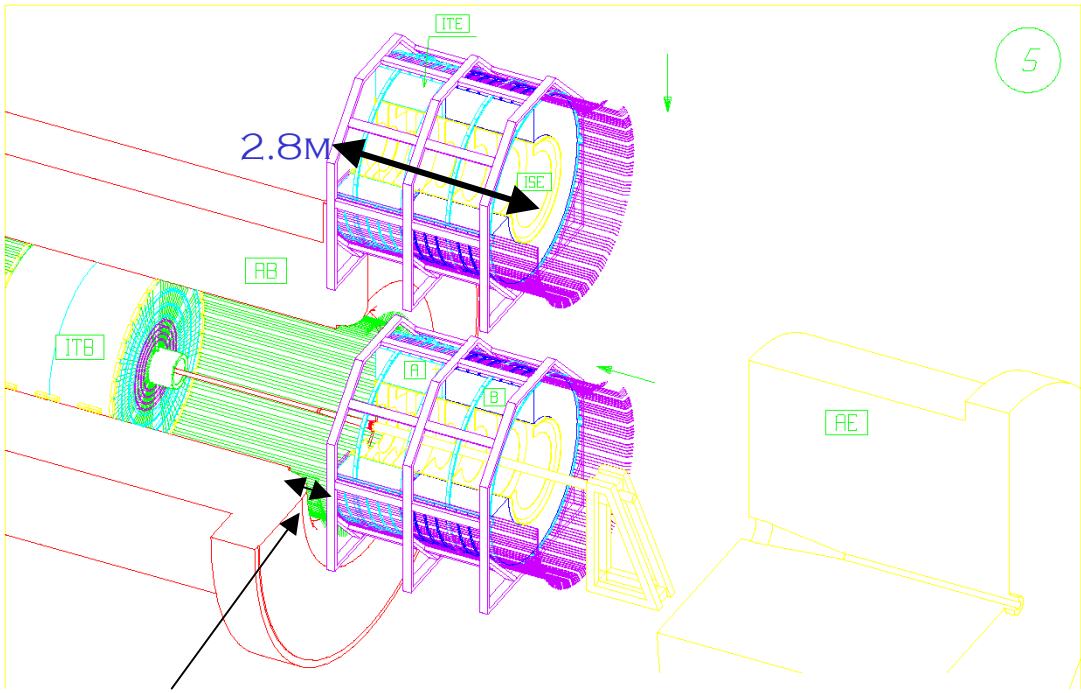

Clearance needed for Support removal

- **Forward length + some clearance is close to 4.6m**
- **Propose to use same structure for cantilevering beam pipe**
- **Cantilever structure at end is not designed, but problem is common within ID**
- **Could Consider Delivering assembled from surface…**

Connection Time Estimate

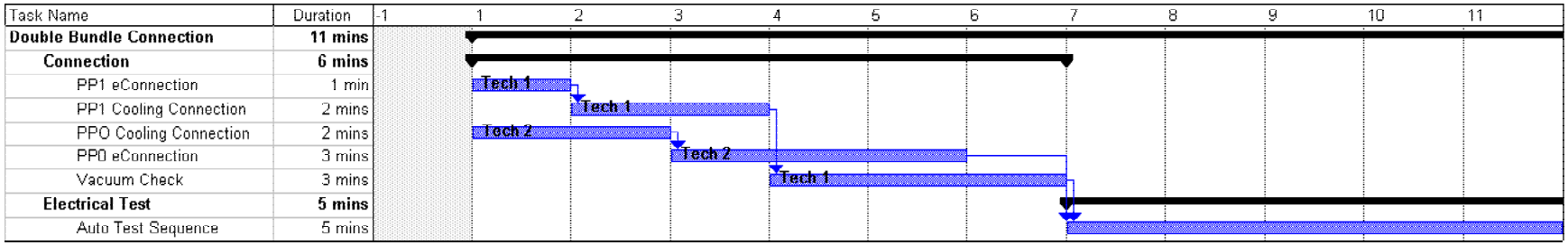

- **What would surface assembly save?**
- **Minimum estimated testing and connection times**
  - 11min/Test unit–5min of which is Automatic test
  - Requires 2 technicians–up to 4 can work simultaneously which halves the overall time
  - Absolute minimum for each connection–could be much more if systematic failures present
- **Cycle time based on connection and testing of bundles on a single cooling circuit**
  - 62 tests on side A (11.4hours X 2-techs)
  - 73 tests on Side C (13.4hours X 2-techs)
  - Elapsed time for either side could be approximately 1-8hr shift for 4-techs
- **Failure scenarios and associated times need to be developed–could multiply by factors…**

Testability of Service Termination

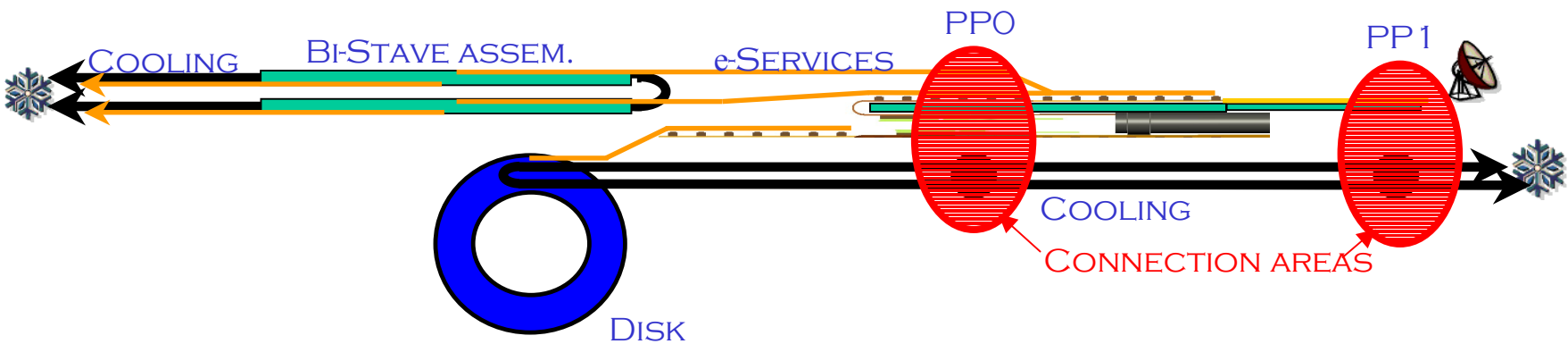

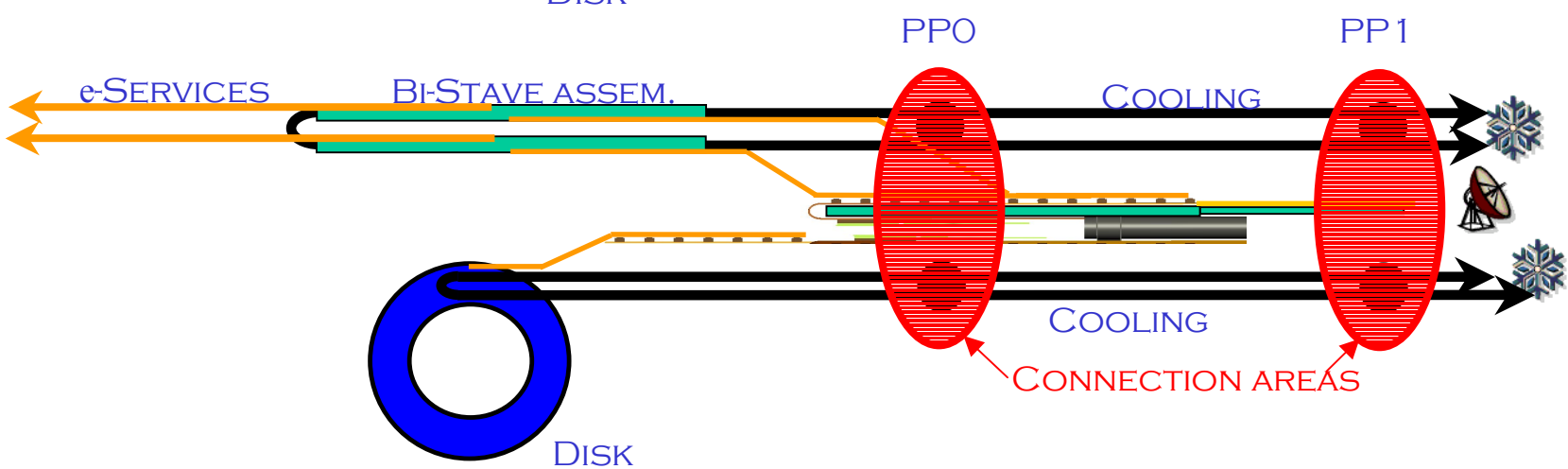

Cooling services for a Bi-stave assembly go out one side, Electrical services go out both sides leading to a slight test problem–somewhat desirable to terminate both sides on surface...

Module Connection Testing Temporary Cooling Plant (Gas)

B-Layer insertion configuration

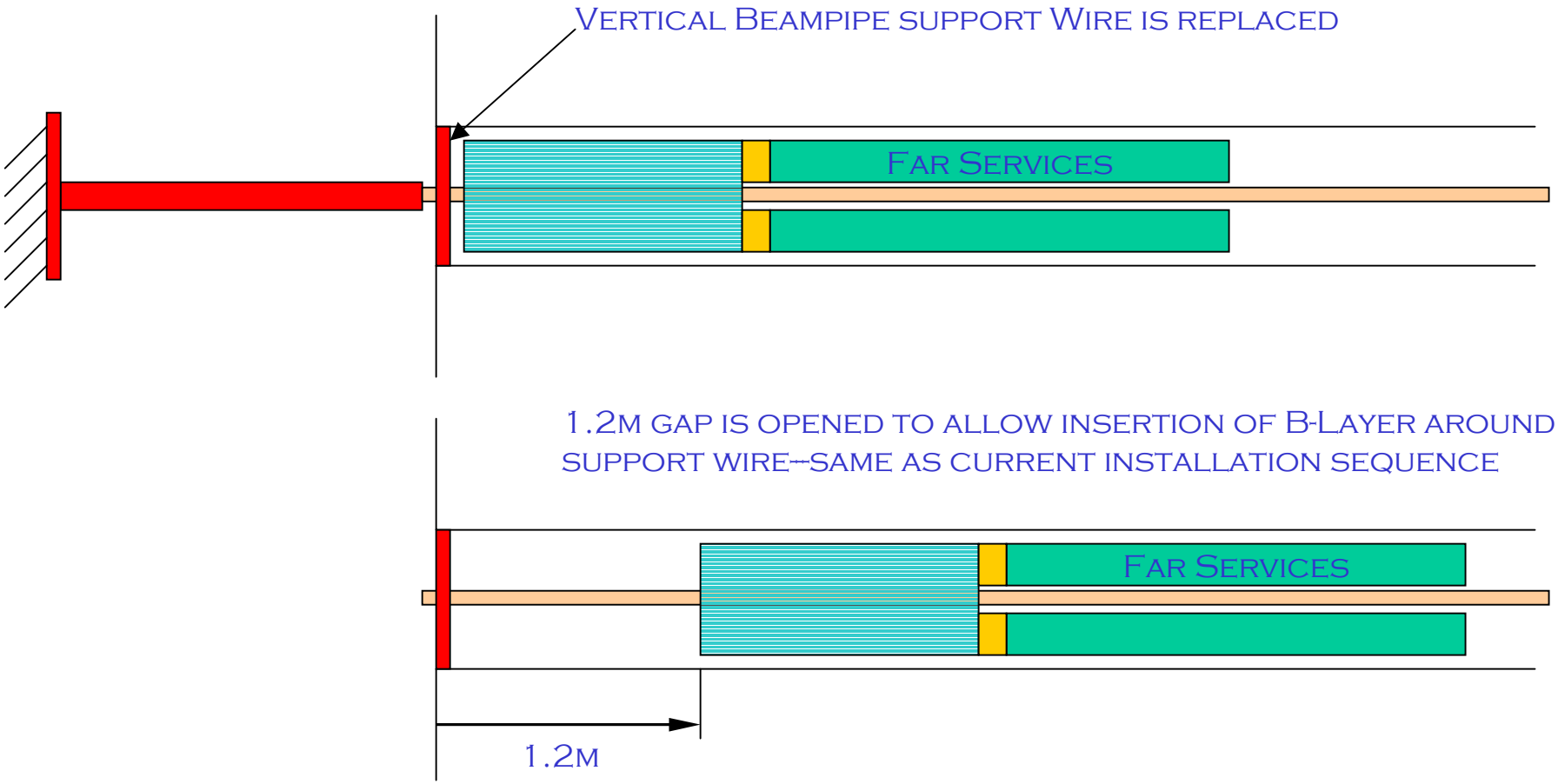

B-Layer is clam-shelled and smaller than the beam pipe flange.

B-layer Clam Shelled and Inserted

TOP View

Halves are inserted around wire-required tooling is not shown

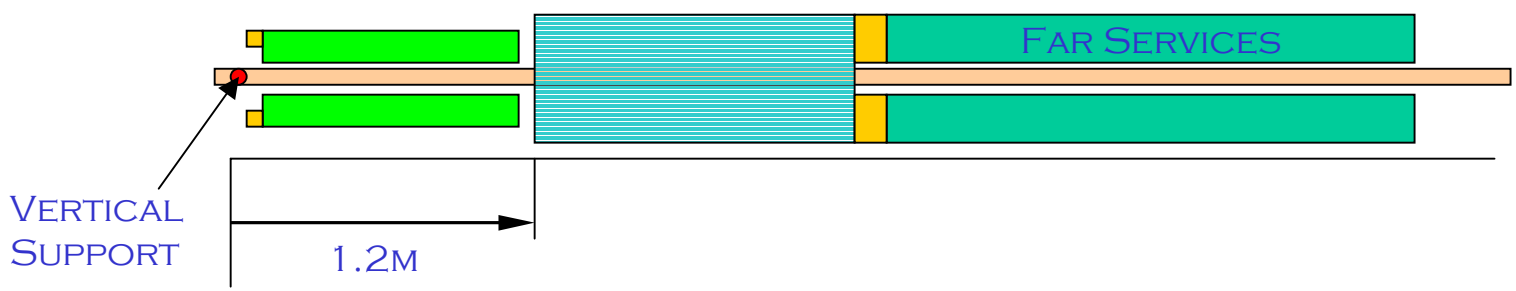

Side View

Halves are closed and fixed together

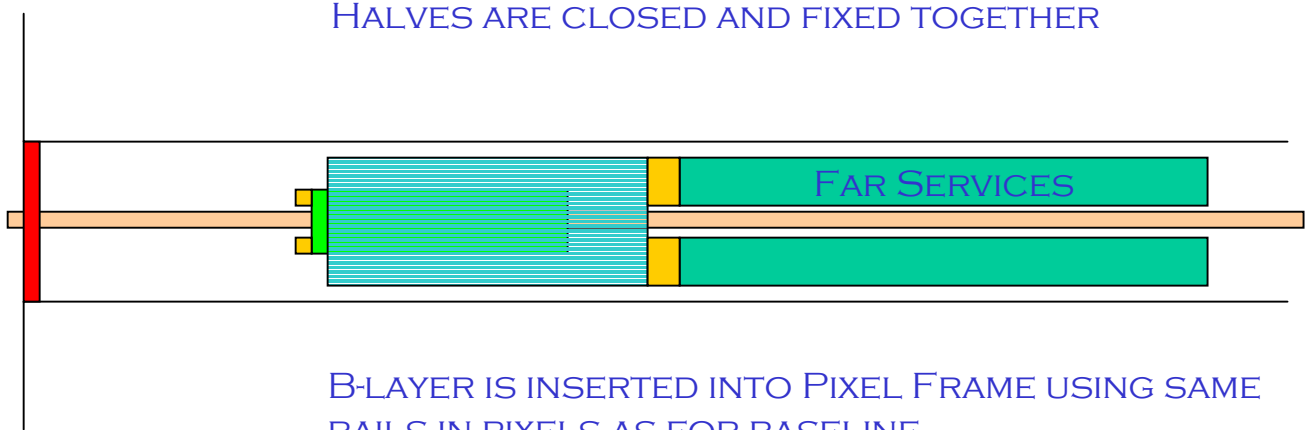

B-layer is inserted into Pixel Frame using same rails in pixels as for baseline

Pixel Detector

Assembly Concept

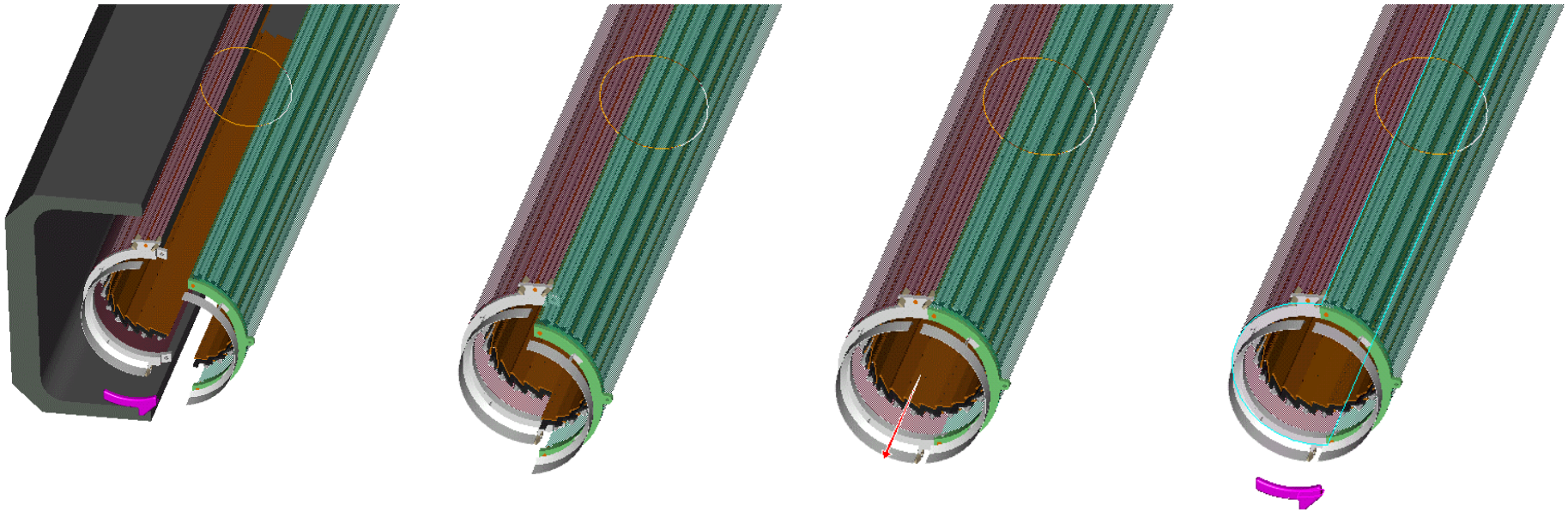

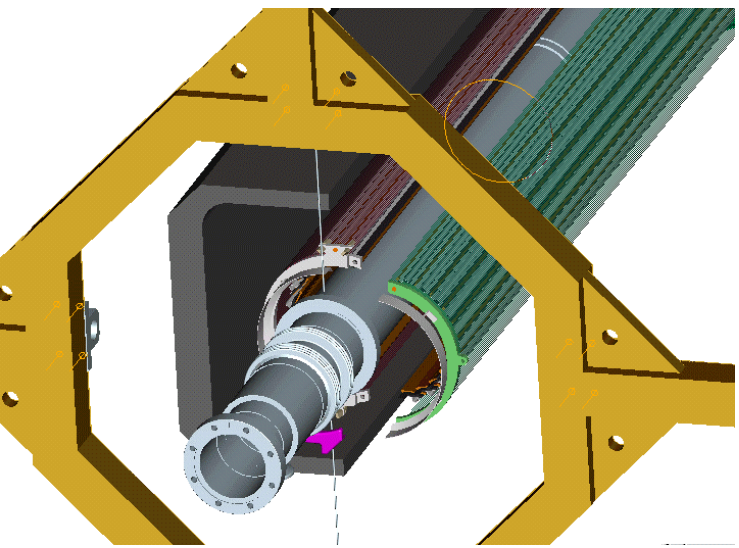

Halves are held together by longitudinal actuation

Preliminary design of tooling structures is consistent with space available. Larger apertures would be nice to allow flexibility in support schemes

Pixel Detector

Insertion of B-Layer

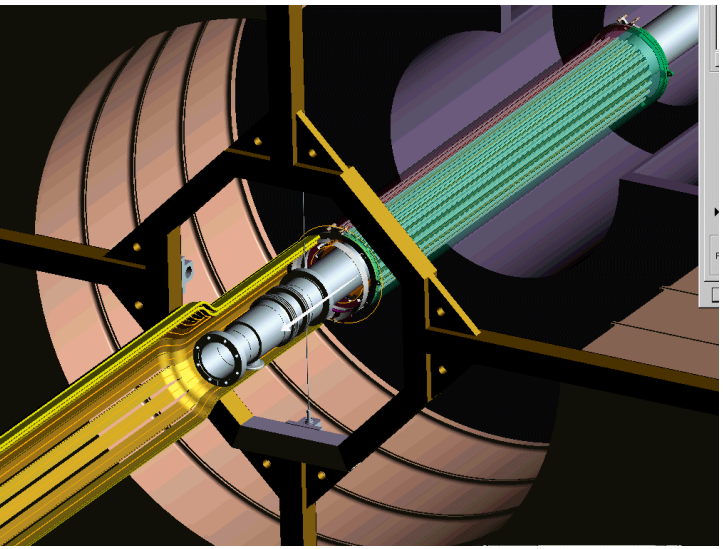

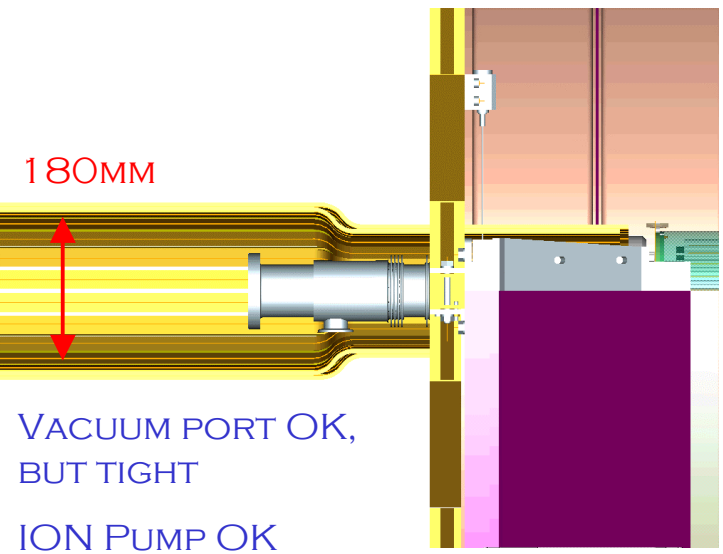

Vacuum port OK, but tight

ION Pump OK

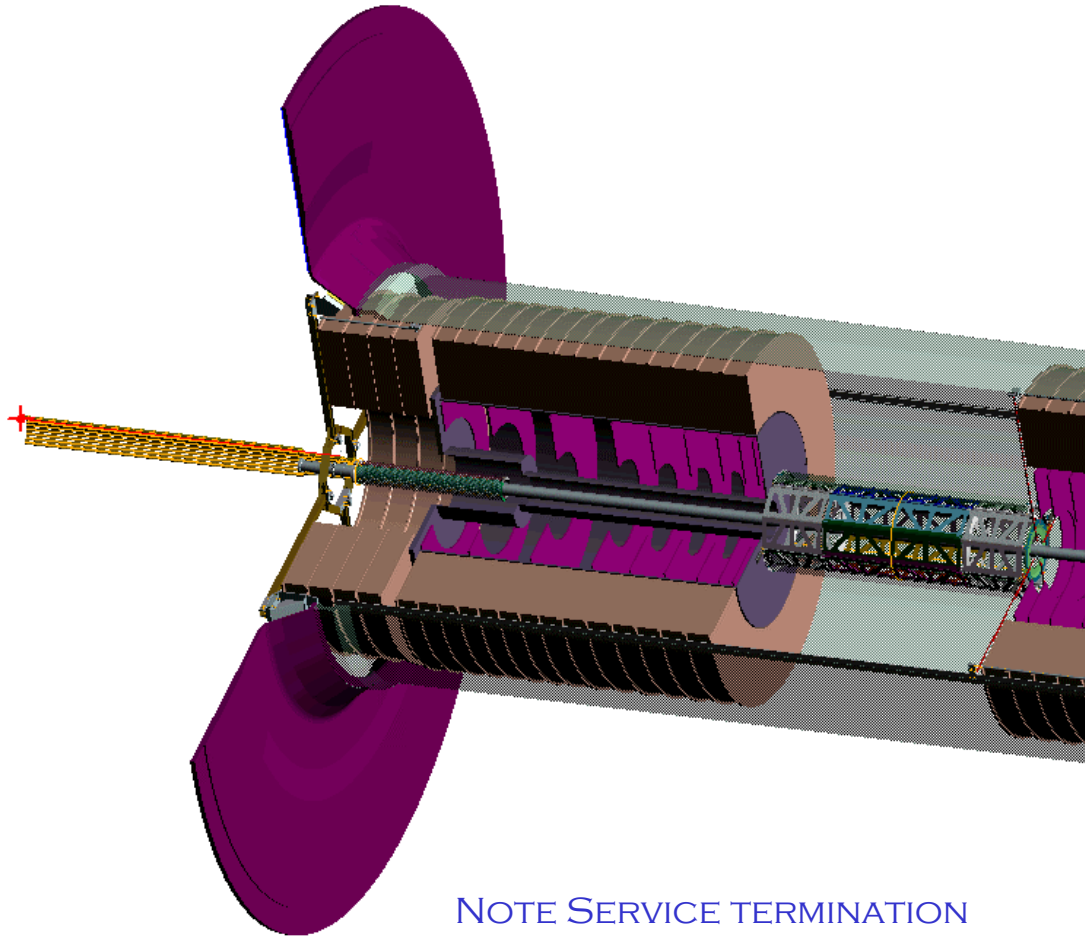

Note Service termination scheme has changed– services are connected to b-layer later

Pixel Near Side Service Termination

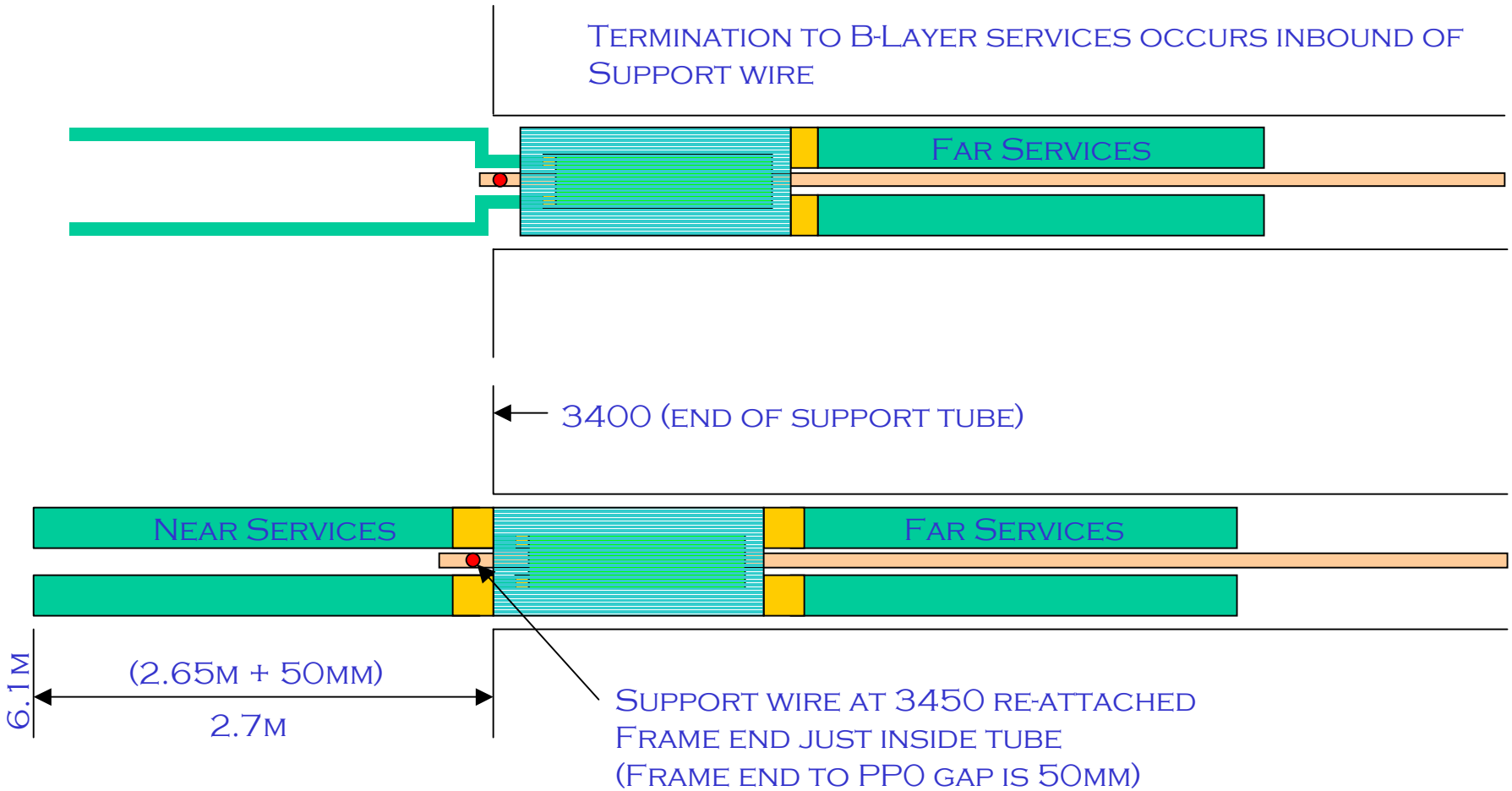

Note–due to history, this is consistent length-wise with the short access configuration

Access to B-Layer

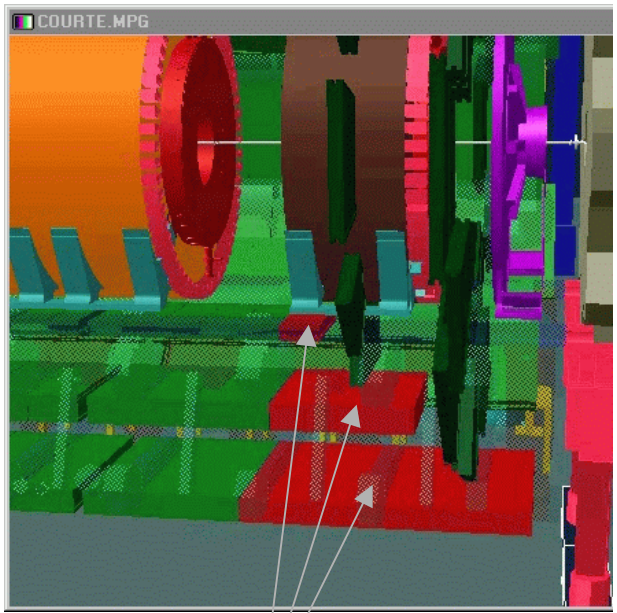

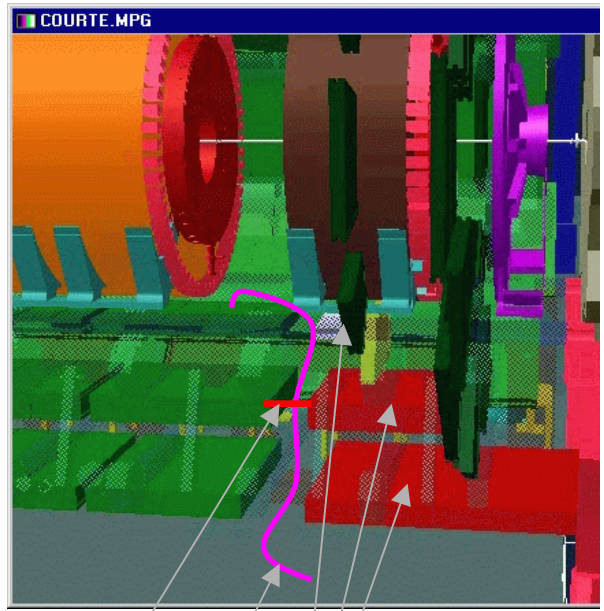

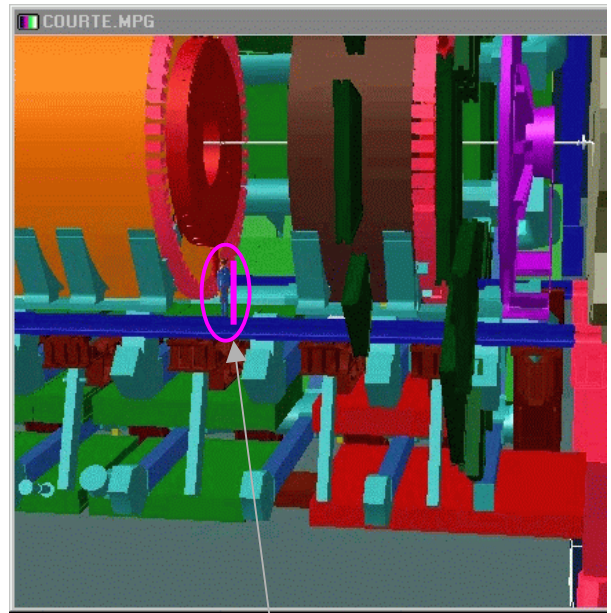

~ 1 meter

Chambers indicated in RED, Closed Position

Access

Chambers in Open Positions

Smallest opening: 870mm x 1.5m

Reference Man- Magenta Bar of Same height shown next to him

Pixel Near Side Service Termination

This installation procedure is keyed off of the support wire.
At Z=3450
All lengths can be measured from it, but the area is congested.

It may be necessary to adjust these numbers some 100-200mm to
Account for the complex termination of the B_Layer services

→ This will require mocking up to understand better than this...

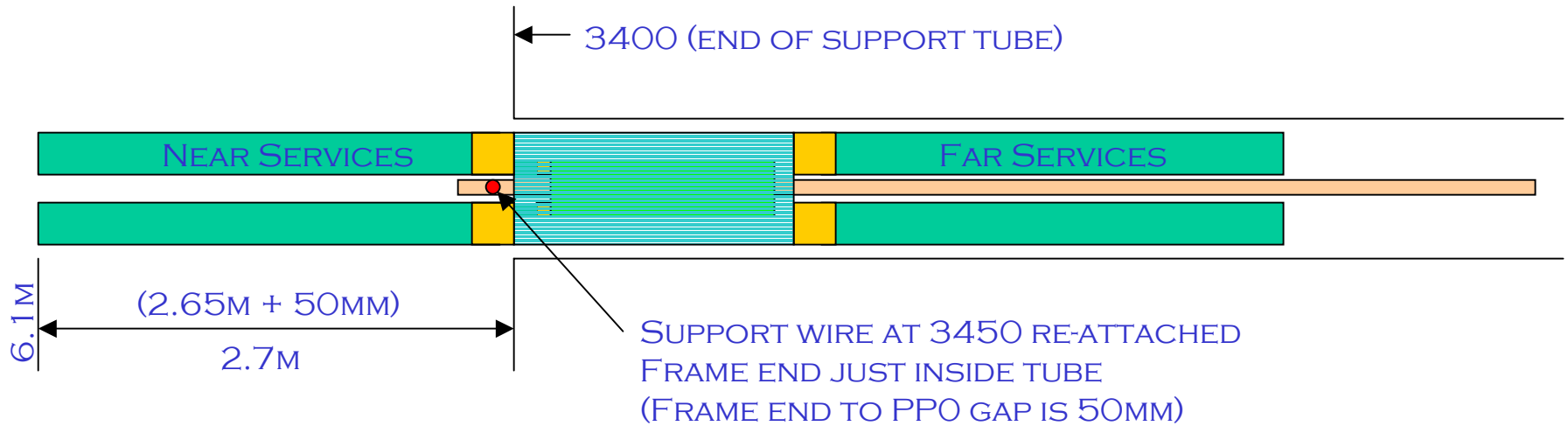

Pixels integrated with Beam Pipe on Surface

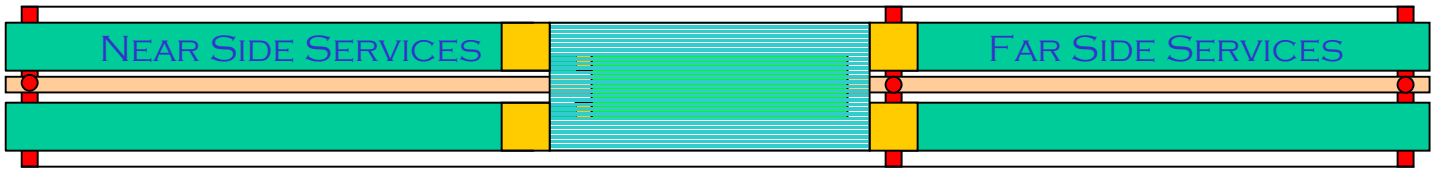

- **It has been shown that a 7m long object can be delivered in a long access configuration (T Nyman)**
- **Delivering system on cradle and pushing into tube is clearly possible–VI supported independently from pixel support tube**
- **Most of the previous installation/access steps are still valid**
- **Requirements**
  - Pixels are ready entirely to install when VI can last be installed
  - VI is integrated with Pixels on Surface (required for B-Layer installation)
- **Consequences**
  - VI tied to Pixels schedule-wise (not necessarily wise)
  - Extra VI (Al) may be needed
- **Very preliminary–doesn't feel like the right thing to do…**

Conclusion

- **Pixel insertion is currently rather conceptual, but appears consistent with the appropriate installation scenarios (Long Access)**
  - Access structures of other devices need to be shared and understood
- **B-Layer removal is possible (but painful) in short access configuration**
  - Unclear if this is still a requirement or even desired
- **Possible benefits are available with various levels of integration on the surface**

Pixel Frame and Service Mockup

- **Scope**
  - Mass and Envelope Geometry of final detector Frame
    - Attempting for similar friction as well
  - At least two full quadrants of dummy service panels
    - Initially 1-quadrant, both sides, eventually half of all services (are more needed?)
  - At least two octants (both sides) of mechanically accurate connections
    - Needed for installation simulation
  - At least one octant of electrically active service connections
    - This is to provide verification that terminations stay terminated through procedure
    - Might prove useful for thermal mockup
  - Provision for Dummy B-Layer installation
    - Requires also mechanical connections for installation simulation

Pixel Support Tube Mockup

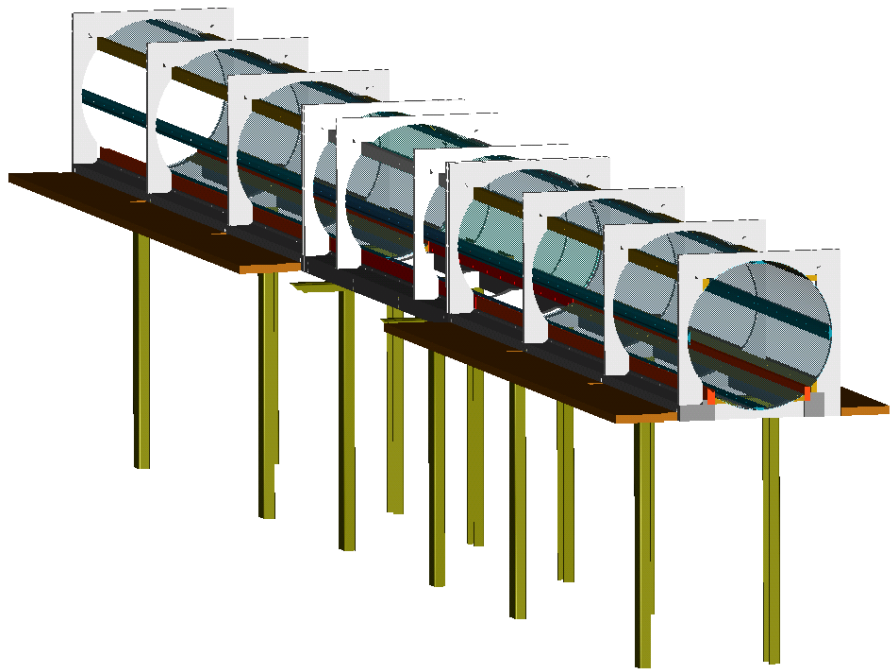

- **Sufficient space acquired in old Bevatron Generator Room**
  - Enough space to simulate entire assembly sequence
  - Even possible to do this on scaffolding if so desired (don't desire to)
- **Mockup in three pieces to simulate independent parts of tube**
  - Goal is for full length of entire tube to simulate all installation scenarios
  - Detector rails are removable, should modification be necessary

Rail Design in Support Tube

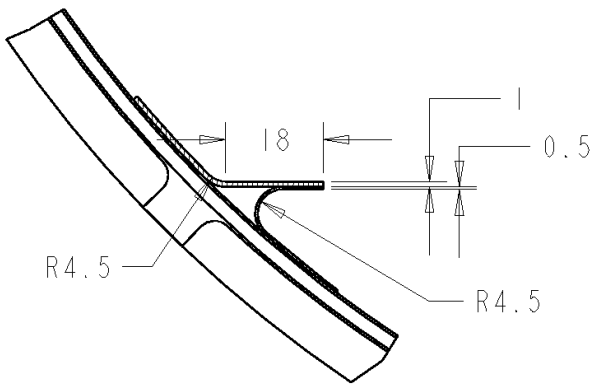

DETAIL 1

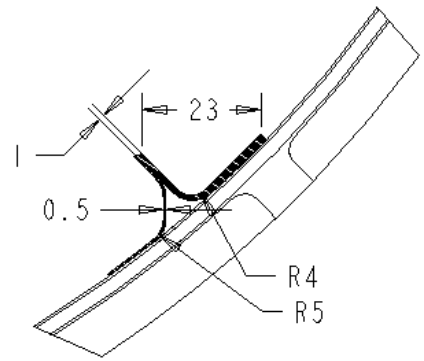

DETAIL 2

Vee and Flat rails were chosen to provide pseudo-kinematic support for the detector during delivery to the support points

Rails are used only for delivery, not support

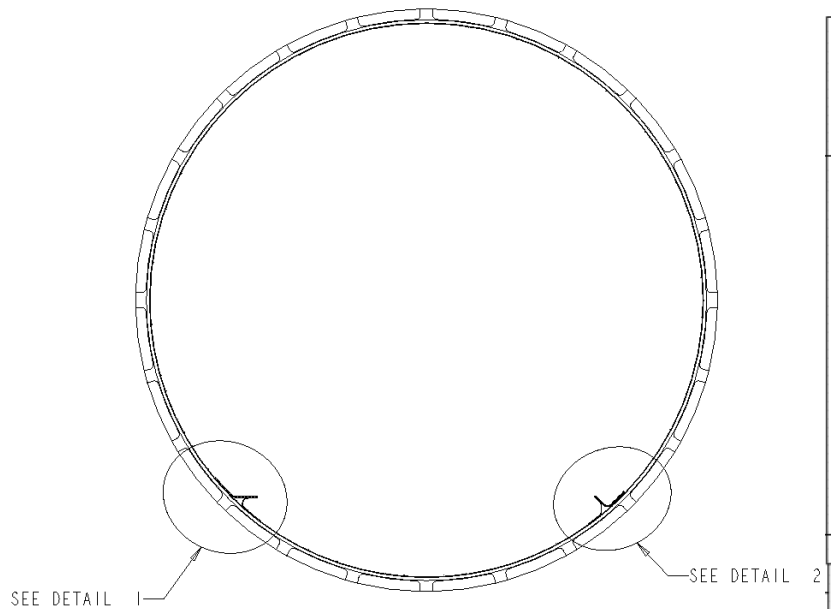

SECTION A-A
SCALE 0.375

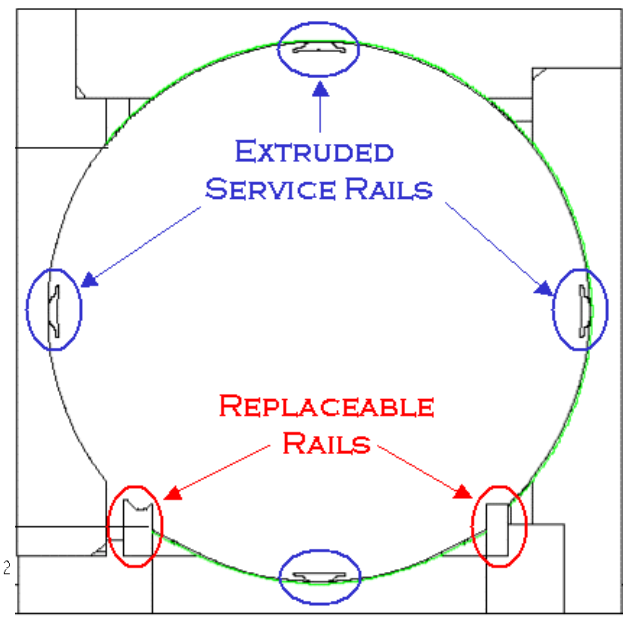

MOCKUP

Pixel Detector

Parts

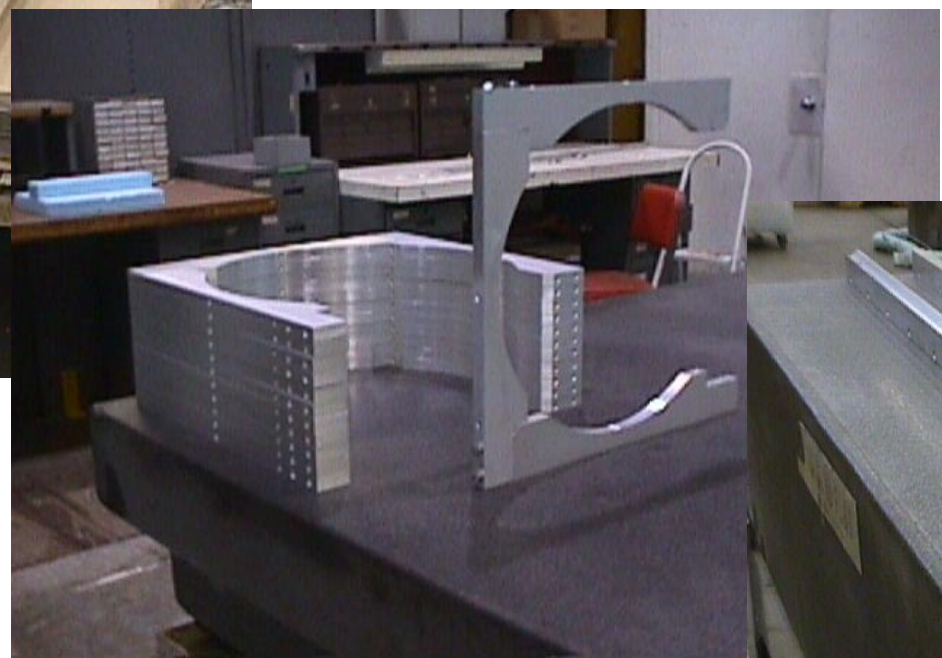

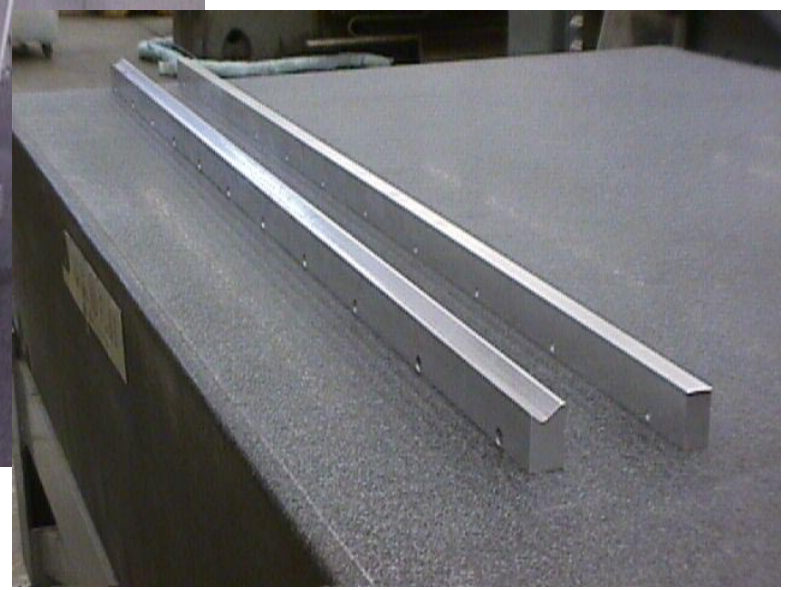

- **Parts for Installation Mockup**
  - Installation mockup resembles potential cradle design–will investigate this further
  - Assembly of mockup will aid in determining what insertion tooling is also needed

Mockup Status and Planning

- **Plan to have completed both Tube and Pixel/Service mockups by end of March**
  - Machining is critical path, but is currently on schedule
- **Initial testing of insertion complete by mid April**
  - Allows inclusion of results in June CDR of Pixel Tube and Global supports
- **Milestones**
  - April
    - Frame and Dummy-Dummy services
  - June-Aug
    - Electrically active testing/thermal simulation
  - Oct-02
    - Mechanical testing of Assembly procedures
- **Follow-up**
  - Space is acquired
  - Fabrication–on schedule
  - Pixel Frame and Service Panel mockup
    - Mass tally has begun
    - Target mockup materials to get close to correct mass
    - Slightly behind schedule