ITEM	PART NO	REQD	DESCRIPTION	MATERIAL

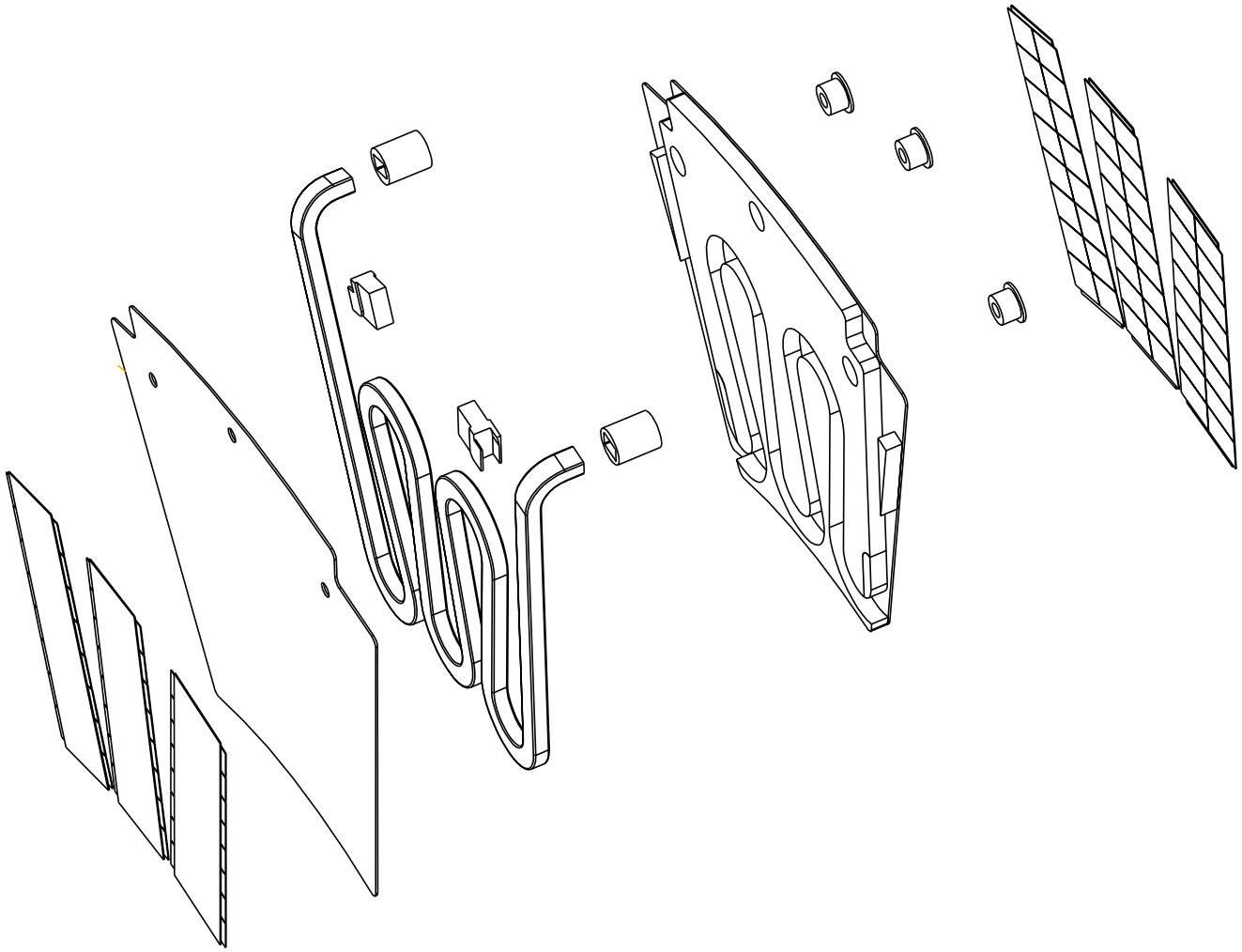

REV	DWG	CHK	ZONE	DATE	CHANGES

UNLESS OTHERWISE SPECIFIED

TOLERANCES		
	X.X ± 0.1	FRAC. ± 1/64
	X.XX ± 0.03	Angles ± 1.00°
	X.XXX ± 0.010	FINISH 125 (μin)

DO NOT SCALE PRINT

THREADS ARE CLASS 2
CHAMFER ENDS OF ALL SCREW TREADS 30°
CUT ROUND, 1.5 THREAD RELIEF ON MACHINED THREADS
BREAK EDGES .016 MAX. ON MACHINED WORK
REMOVE BURRS, WELD SPLATTER & LOOSE SCALE
IN ACCORDANCE WITH ASME Y14.5M & B46.1

SHOP ORDERS

ACCT NO.	NO. REQD	SER NO.	-
		DATE ISSD	-
DEL TO		DATE REQD	-
SURFACE TREATMT			
IDENT METHOD	TAG		
PROJECT NUMBER	N/A		
PROJECT NAME	N/A		
DWG BY	David Uken	DATE	05-Apr-00
CHK BY		DATE	
APR BY		DATE	

ERNEST ORLANDO LAWRENCE BERKELEY NATIONAL LABORATORY
UNIVERSITY OF CALIFORNIA - BERKELEY

Atlas Pixel Detector
II-Sector, Disk I Version
Sector II, Exploded View

MICROFILMED:	DWG. TYPE	SHOWN ON	SCALE: 1.500	DO NOT SCALE PRINTS
	ASSEM		SHEET 1 OF 2	
PATENT CLEAR:	DESIGN ACCT. NO.	CATEGORY CODE	DWG. NO. 3 SIZE	REV.

Dwg. File: SECTOR_II_DISK_I Model File: DISK_I

DWG. NO. 3 SIZE REV. SH. 2000i1

ITEM	PART NO	REQD	DESCRIPTION	MATERIAL

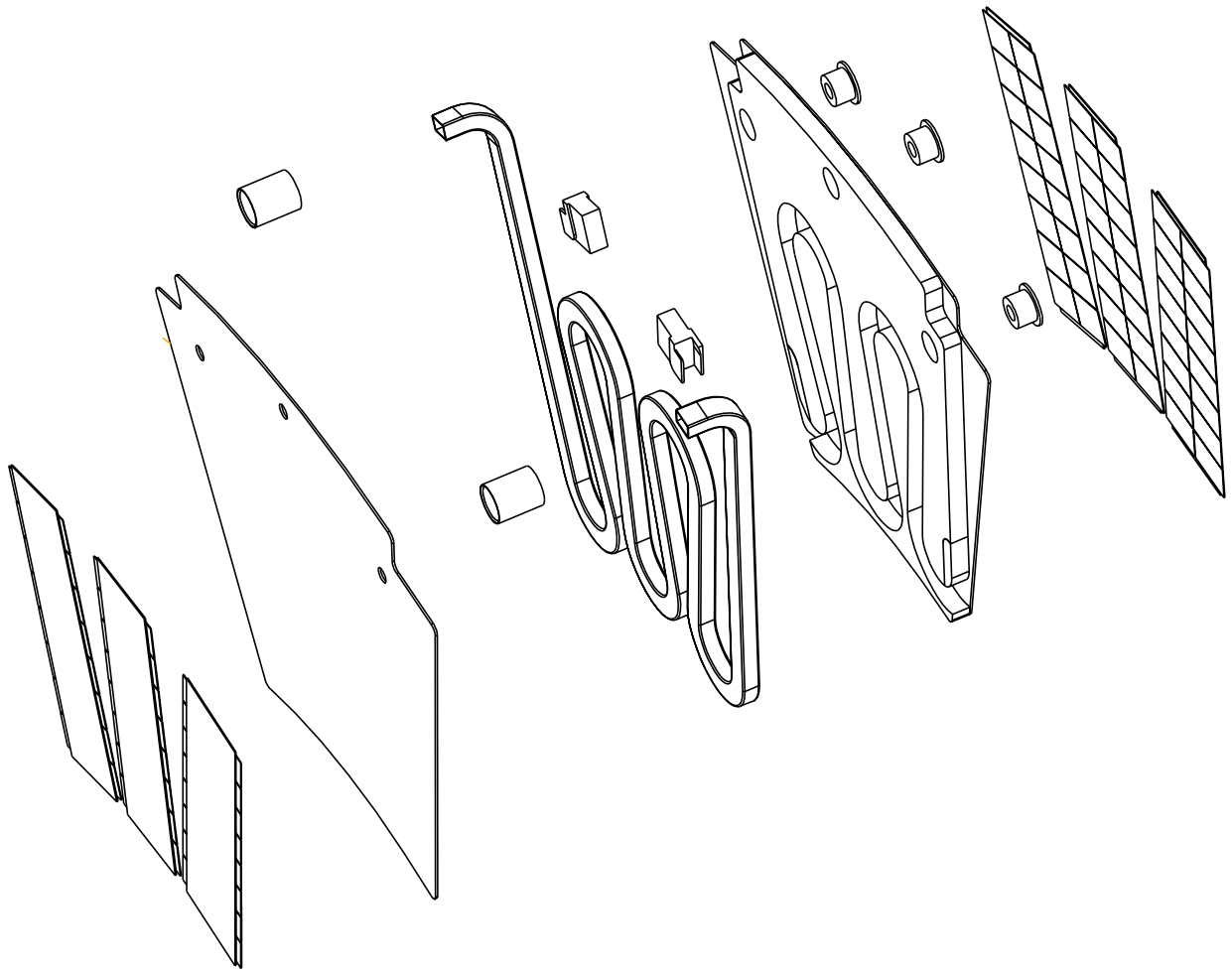

REV	DWG	CHK	ZONE	DATE	CHANGES

UNLESS OTHERWISE SPECIFIED

TOLERANCES		
	X.X ± 0.1	FRAC. ± 1/64
	X.XX ± 0.03	Angles ± 1.00°
	X.XXX ± 0.010	FINISH 125 (µin)

DO NOT SCALE PRINT

THREADS ARE CLASS 2

CHAMFER ENDS OF ALL SCREW TREADS 30°

CUT ROUND, 1.5 THREAD RELIEF ON MACHINED THREADS

BREAK EDGES .016 MAX. ON MACHINED WORK

REMOVE BURRS, WELD SPLATTER & LOOSE SCALE

IN ACCORDANCE WITH ASME Y14.5M & B46.1

SHOP ORDERS

ACCT NO.	NO. REQD	SER NO.	-
		DATE ISSD	-
DEL TO		DATE REQD	-
SURFACE TREATMT			
IDENT METHOD	TAG		
PROJECT NUMBER	N/A		
PROJECT NAME	N/A		
DWG BY	David Uken	DATE	05-Apr-00
CHK BY		DATE	
APR BY		DATE	

ERNEST ORLANDO LAWRENCE BERKELEY NATIONAL LABORATORY

UNIVERSITY OF CALIFORNIA - BERKELEY

Atlas Pixel Detector

II-Sector, Disks 2 and 3 Version

Sector II, Exploded View

MICROFILMED:	DWG. TYPE	SHOWN ON	SCALE: 1.500	DO NOT SCALE PRINTS
	ASSEM		SHEET 1 OF 2	
PATENT CLEAR:	DESIGN ACCT. NO.	CATEGORY CODE	DWG. NO. 3	SIZE / REV.

Dwg. File: SECTOR-II-DISK-2-AND-3.Model File: DISK_2-AND-3.

DWG. NO. 3 SIZE REV. SH. 2000i1

Rev. (07/28/97 J. Uhrig)

DESCRIPTION	MATERIAL	MAT. LOCATION
		-

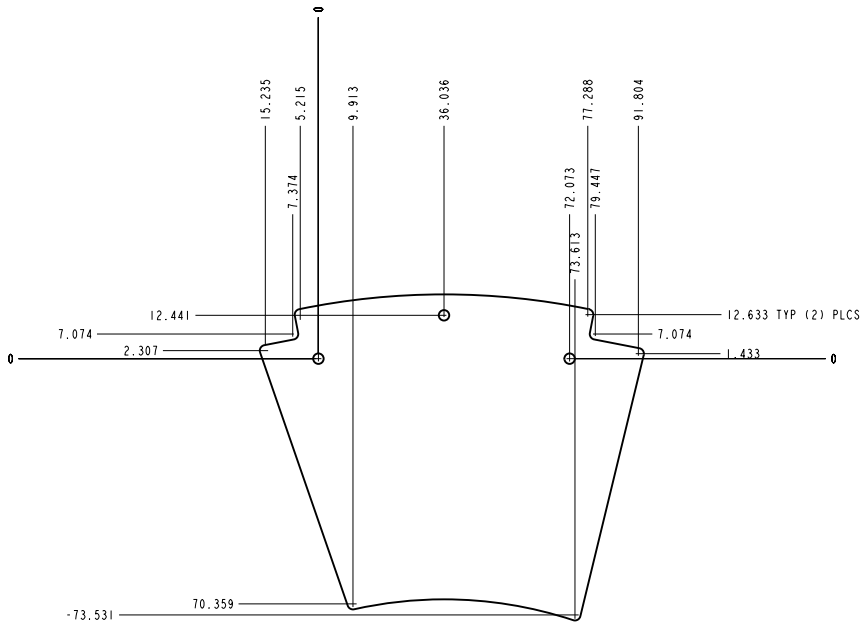

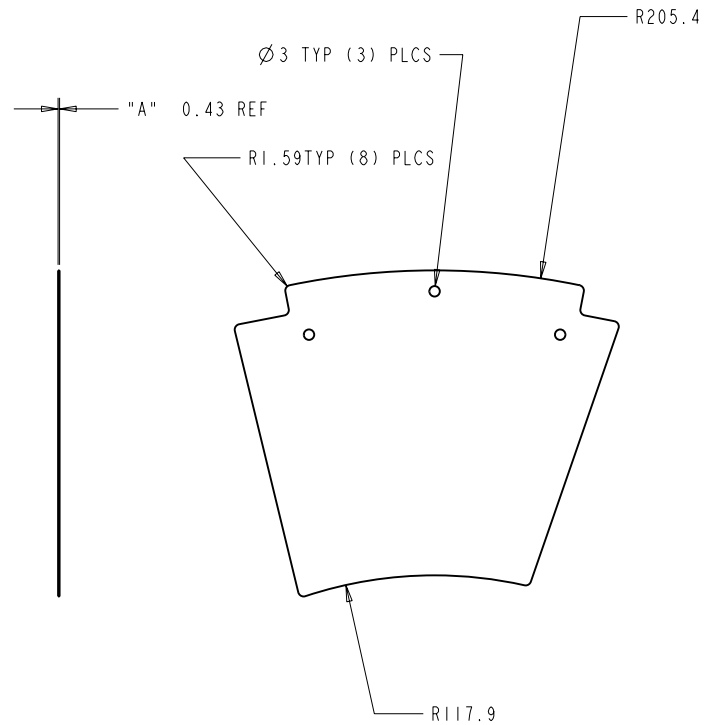

Part Number	Description	"A" Thickness
	Original Design	.432
	Proposed Thinner Facing	.300

REV	DWG	CHK	ZONE	DATE	CHANGES

UNLESS OTHERWISE SPECIFIED

TOLERANCES		
	X.X ± 0.1	FRAC. ± 1/64
	X.XX ± 0.03	Angles ± 1.00°
	X.XXX ± 0.010	FINISH 125 √μin

DO NOT SCALE PRINT

THREADS ARE CLASS 2
CHAMFER ENDS OF ALL SCREW TREADS 30°
CUT ROUND, 1.5 THREAD RELIEF ON MACHINED THREADS
BREAK EDGES .016 MAX. ON MACHINED WORK
REMOVE BURRS, WELD SPLATTER & LOOSE SCALE
IN ACCORDANCE WITH ASME Y14.5M & B46.1

SHOP ORDERS

ACCT NO.	7916-27	NO. REQD 66	SER NO. -
DEL TO	ERIC ANDERSSEN		DATE ISSD -
			DATE REQD -
SURFACE TREATMT			
IDENT METHOD	TAG		
PROJECT NUMBER	N/A		
PROJECT NAME	N/A		
DWG BY		DATE 03-Apr-00	
CHK BY		DATE	
APR BY		DATE	

ERNEST ORLANDO LAWRENCE BERKELEY NATIONAL LABORATORY
UNIVERSITY OF CALIFORNIA - BERKELEY

Sector Facing, Top
11-Sector Version
Atlas Detector

MICROFILMED:	DWG. TYPE	SHOWN ON	SCALE: 1.000	DO NOT SCALE PRINTS
	PART		SHEET 1 OF 1	
PATENT CLEAR:	DESIGN ACCT. NO.	CATEGORY CODE	DWG. NO. 3	SIZE / REV. A

Jobs File: SECTOR.11 TOP FACING Model File: TOP FACING

DWG. NO. 33 SIZE REV SH. 2000111

Rev. 12/12/00 J. Shaw

DESCRIPTION	MATERIAL	MAT. LOCATION
		-

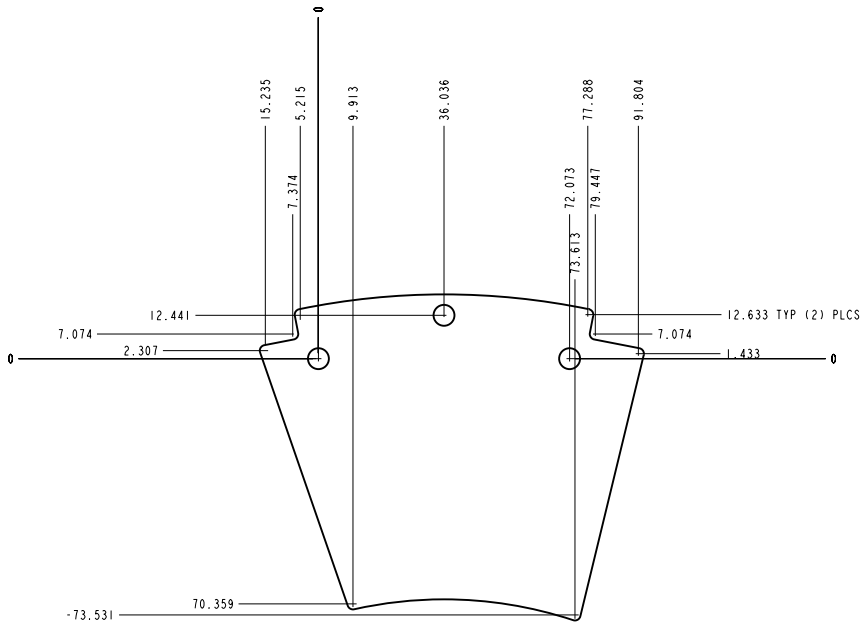

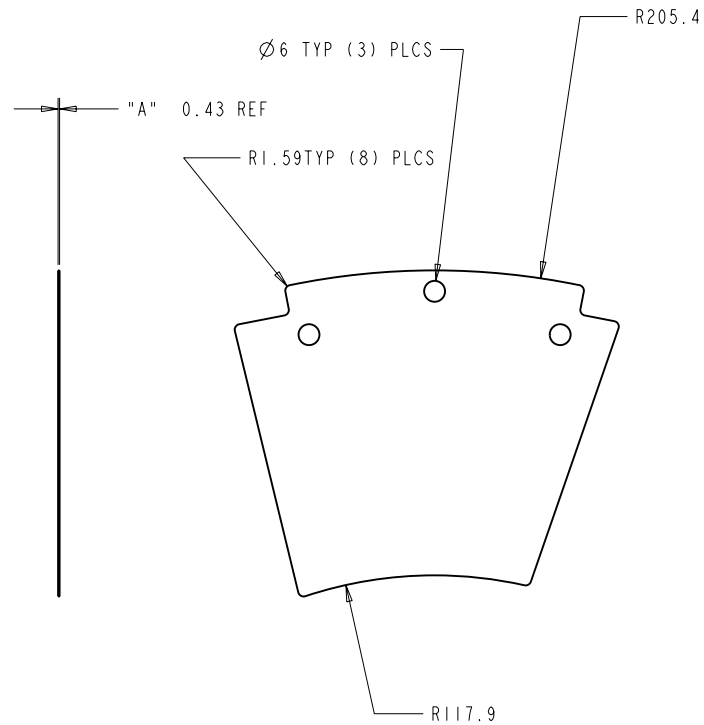

Part Number	Description	"A" Thickness
	Original Design	.432
	Proposed Thinner Facing	.300

REV	DWG	CHK	ZONE	DATE	CHANGES

UNLESS OTHERWISE SPECIFIED

TOLERANCES		
	X.X ± 0.1	FRAC. ± 1/64
	X.XX ± 0.03	Angles ± 1.00°
	X.XXX ± 0.010	FINISH 125 (μin)

DO NOT SCALE PRINT

THREADS ARE CLASS 2
CHAMFER ENDS OF ALL SCREW TREADS 30°
CUT ROUND, 1.5 THREAD RELIEF ON MACHINED THREADS
BREAK EDGES .016 MAX. ON MACHINED WORK
REMOVE BURRS, WELD SPLATTER & LOOSE SCALE
IN ACCORDANCE WITH ASME Y14.5M & B46.1

SHOP ORDERS

ACCT NO.	7916-27	NO. REQD	66
DEL TO	ERIC ANDERSSEN		
SURFACE TREATMT			
IDENT METHOD	TAG		
PROJECT NUMBER	N/A		
PROJECT NAME	N/A		
DWG BY		DATE	03-Apr-00
CHK BY		DATE	
APR BY		DATE	

SER NO. -
DATE ISSD -
DATE REQD -

ERNEST ORLANDO LAWRENCE BERKELEY NATIONAL LABORATORY
UNIVERSITY OF CALIFORNIA - BERKELEY

Sector Facing, Bottom (Ring Side)
11-Sector Version
Atlas Detector

MICROFILMED:	DWG. TYPE	SHOWN ON	SCALE: 1.000	DO NOT SCALE PRINTS
	PART		SHEET 1 OF 1	
PATENT CLEAR:	DESIGN ACCT. NO.	CATEGORY CODE	DWG. NO. 3	SIZE / REV. A

DWG. NO. 33 SIZE REV. SH. 200011

Dwg. File: SECTOR_11_FACING Model File: SECTOR_11_FACING

DESCRIPTION	MATERIAL	MAT. LOCATION
		-

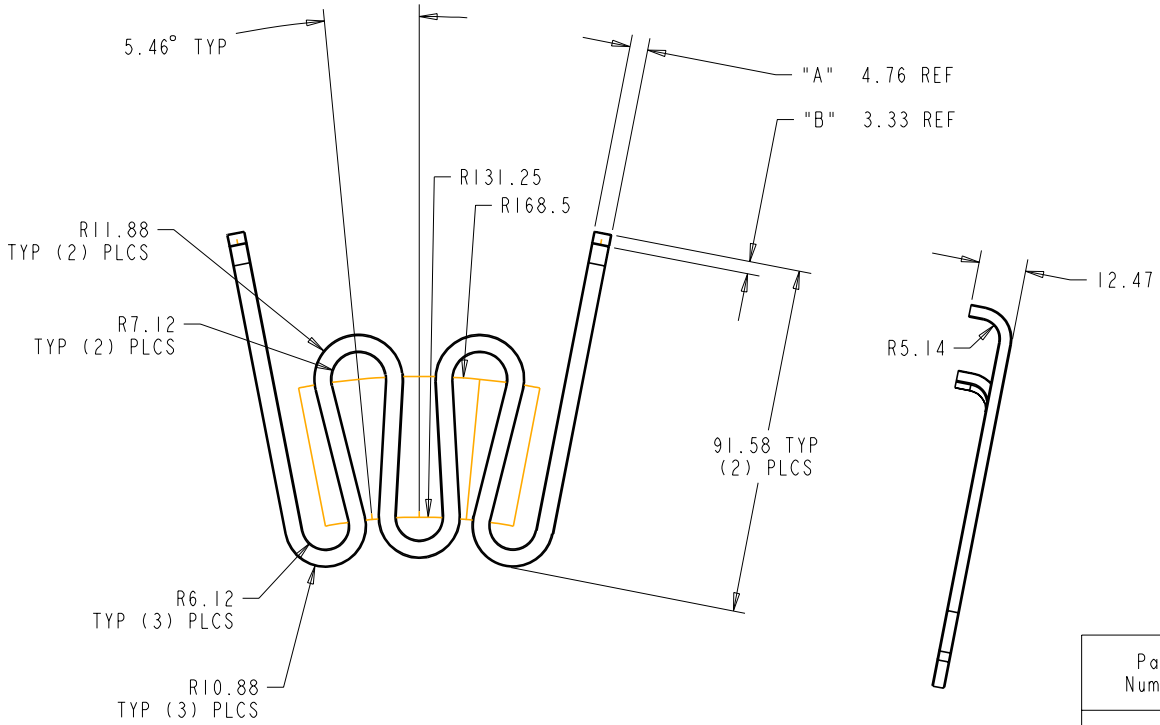

OVERALL LENGTH = 444.5 MM

Part Number	Description	"A" Width	"B" Height
	Original Cross-Section	4.76	3.33
	Reduced Hydraulic Diameter	4.76	2.28
	Etched Outer Surface	4.55	2.03

REV	DWG	CHK	ZONE	DATE	CHANGES

UNLESS OTHERWISE SPECIFIED

TOLERANCES		
	X.X ± 0.1	FRAC. ± 1/64
	X.XX ± 0.03	Angles ± 1.00°
	X.XXX ± 0.010	FINISH 125 (µin)

DO NOT SCALE PRINT

THREADS ARE CLASS 2
CHAMFER ENDS OF ALL SCREW TREADS 30°
CUT ROUND, 1.5 THREAD RELIEF ON MACHINED THREADS
BREAK EDGES .016 MAX. ON MACHINED WORK
REMOVE BURRS, WELD SPLATTER & LOOSE SCALE
IN ACCORDANCE WITH ASME Y14.5M & B46.1

SHOP ORDERS

ACCT NO.	7916-27	NO. REQD 33	SER NO. -
DEL TO	Eric Anderssen		DATE ISSD -
			DATE REQD -
SURFACE TREATMT			
IDENT METHOD	TAG		
PROJECT NUMBER	N/A		
PROJECT NAME	N/A		
DWG BY	David Uken		DATE 03-Apr-00
CHK BY			DATE
APR BY	Eric Anderssen		DATE

ERNEST ORLANDO LAWRENCE BERKELEY NATIONAL LABORATORY
UNIVERSITY OF CALIFORNIA - BERKELEY

Cooling Tube
II-Sector Version
ATLAS DETECTOR

MICROFILMED:	DWG. TYPE	SHOWN ON	SCALE: 1.000	DO NOT SCALE PRINTS
	PART		SHEET 1 OF 1	
PATENT CLEAR:	DESIGN ACCT. NO.	CATEGORY CODE	DWG. NO. 3	SIZE / REV. A

Dwg File: SECTOR-II-COOLING_TUBE_Model File: SECTOR-II-COOLING_TUBE

DWG. NO. 13 SIZE REV. SH. 200011

DESCRIPTION	MATERIAL	MAT. LOCATION
		-

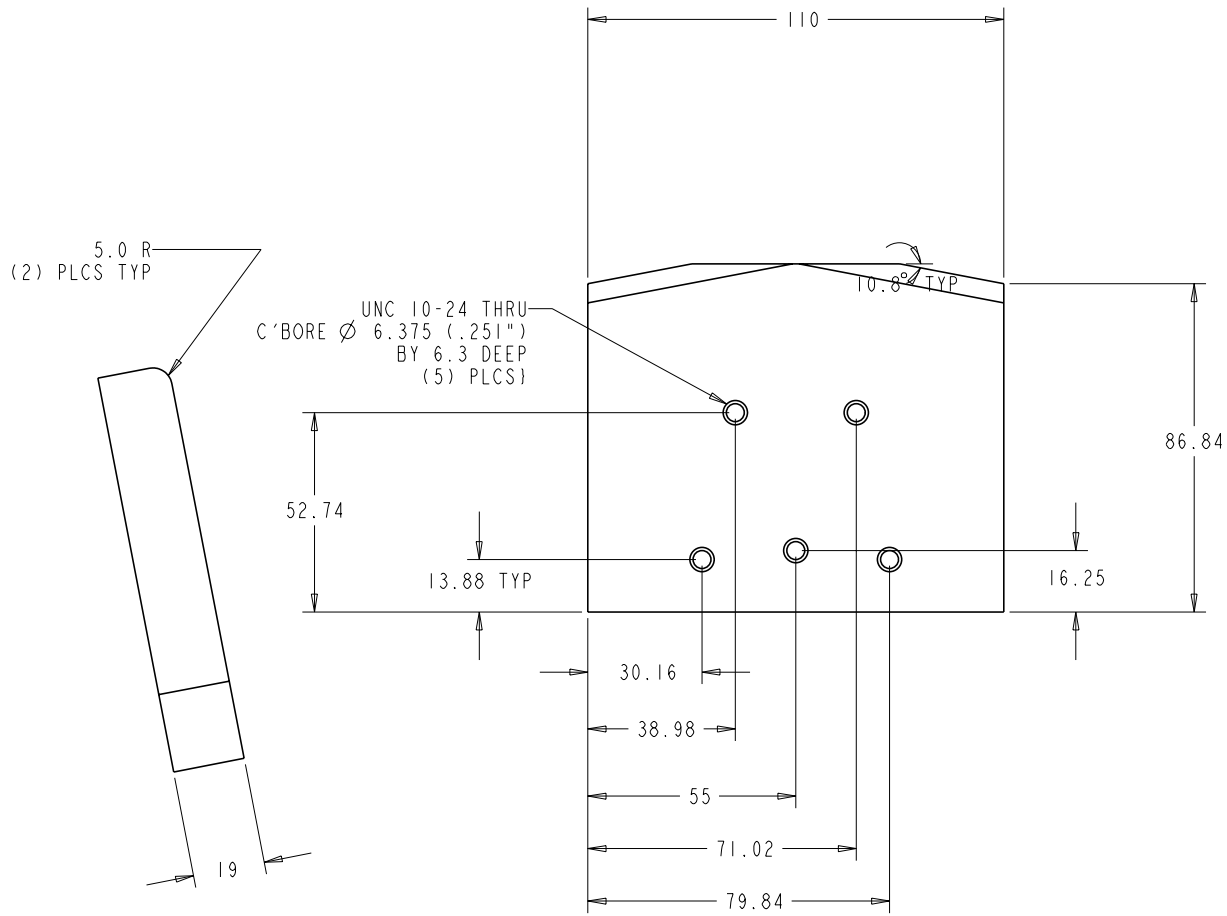

REV	DWG	CHK	ZONE	DATE	CHANGES

UNLESS OTHERWISE SPECIFIED

TOLERANCES		
	X.X ± 0.1	FRAC. ± 1/64
	X.XX ± 0.01	Angles ± 0.50°
	X.XXX ± 0.001	FINISH 125 √(µin)

DO NOT SCALE PRINT

THREADS ARE CLASS 2
CHAMFER ENDS OF ALL SCREW TREADS 30°
CUT ROUND, 1.5 THREAD RELIEF ON MACHINED THREADS
BREAK EDGES .016 MAX. ON MACHINED WORK
REMOVE BURRS, WELD SPLATTER & LOOSE SCALE
IN ACCORDANCE WITH ASME Y14.5M & B46.1

SHOP ORDERS

ACCT NO.	7916-27	NO. REQD 1	SER NO. -
DEL TO	ERIC ANDERSSEN		DATE ISSD -
			DATE REQD -
SURFACE TREATMT			
IDENT METHOD	TAG		
PROJECT NUMBER	N/A		
PROJECT NAME	N/A		
DWG BY	David Uken		DATE 03-Apr-00
CHK BY			DATE
APR BY	Eric Anderssen		DATE

ERNEST ORLANDO LAWRENCE BERKELEY NATIONAL LABORATORY
UNIVERSITY OF CALIFORNIA - BERKELEY

Cooling Tube Bending Jig
11-Sector Version
Atlas Detector

MICROFILMED:	DWG. TYPE	SHOWN ON	SCALE: 1.000	DO NOT SCALE PRINTS
	PART		SHEET 1 OF 1	
PATENT CLEAR:	DESIGN ACCT. NO.	CATEGORY CODE	DWG. NO. 3	SIZE / REV. A

DWG. NO. 23 SIZE 200011 REV. SH.

Dwg. File: SECTOR_11_BENDING_JIG Model File: SECTOR_11_BENDING_JIG

DWG. NO.	SIZE	REV.	SH.
1	2000	i	1

Part Number	Description	"A" Radius
	Upper Bend	7.12
	Lower Bend	6.12

Part Number	Description	"B" Height
	Original	3.33
	Reduced Dia	2.28
	Etched Surf	2.03

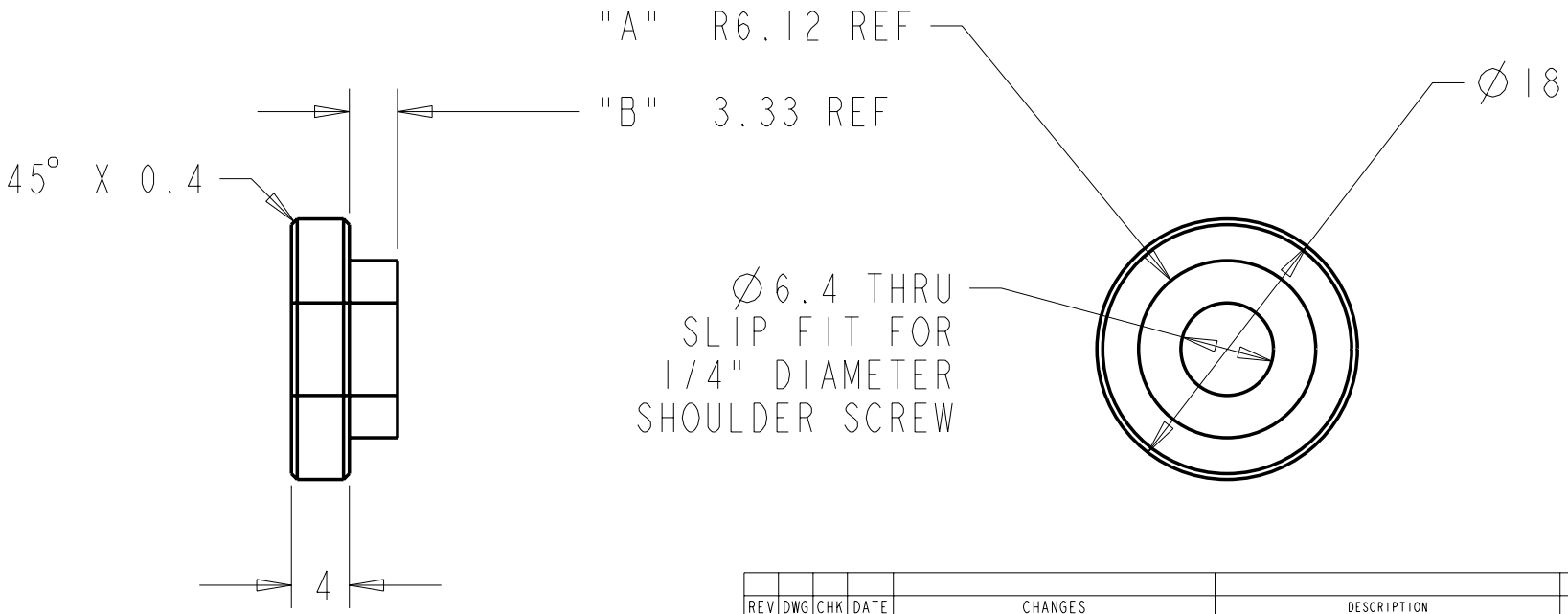

REV	DWG	CHK	DATE	CHANGES	DESCRIPTION	MATERIAL

UNLESS OTHERWISE SPECIFIED

TOLERANCES: X.X ±0.1 FRAC. ±1/64; X.XX ±0.01 Angles ±0.50°; X.XXX ±0.001 FINISH 125 √(μin)

DO NOT SCALE PRINT

THREADS ARE CLASS 2
CHAMFER ENDS OF ALL SCREW TREADS 30°
CUT ROUND, 1.5 THREAD RELIEF ON MACHINED THREADS
BREAK EDGES .016 MAX. ON MACHINED WORK
REMOVE BURRS, WELD SPLATTER & LOOSE SCALE
IN ACCORDANCE WITH ASME Y14.5M & B46.1

SHOP ORDERS

ACCT NO.	7916-27	NO. REQD	3
DEL TO	Eric Anderssen		
SURFACE TREATMT			
IDENT METHOD	TAG		
PROJECT NUMBER	N/A		
PROJECT NAME	N/A		
DWG BY	David Uken	DATE	05-Apr-00
CHK BY		DATE	
APR BY	Eric Anderssen	DATE	

SER NO. -
DATE ISSD -
DATE REQD -

ERNEST ORLANDO LAWRENCE BERKELEY NATIONAL LABORATORY
UNIVERSITY OF CALIFORNIA - BERKELEY

Atlas Pixel Detector
9 and 11-Sector Versions
5.2 Radius Mandrel, Bending Jig

MICROFILMED:	DWG. TYPE	SHOWN ON	SCALE: 2.000	DO NOT SCALE PRINTS
	PART		SHEET 1 OF 1	
PATENT CLEAR:	DESIGN ACCT. NO.	CATEGORY CODE	DWG. NO. 1	SIZE / REV.

Rev. 1/29/2000 J. R. Osborn

Dwg. File: BENDING_JIG_612R_MANDREL Model File: BENDING_JIG_612R_MANDREL

DWG. NO.	SIZE	REV.	SH.
1			1

Part Number	Description	"A"	"B"
	Enlarged Hydraulic Diameter	3.48	4.84
	Original Tubing	2.43	4.84
	Etched Outer Surface	2.18	4.63

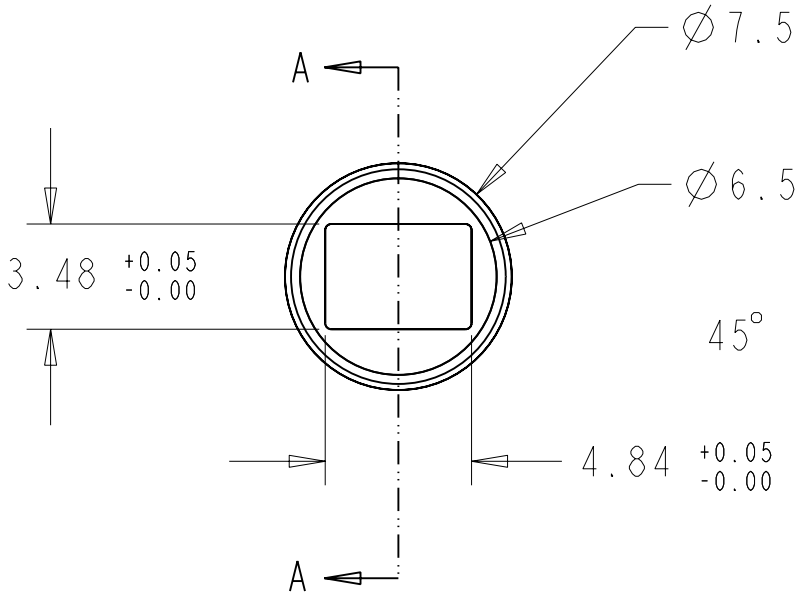

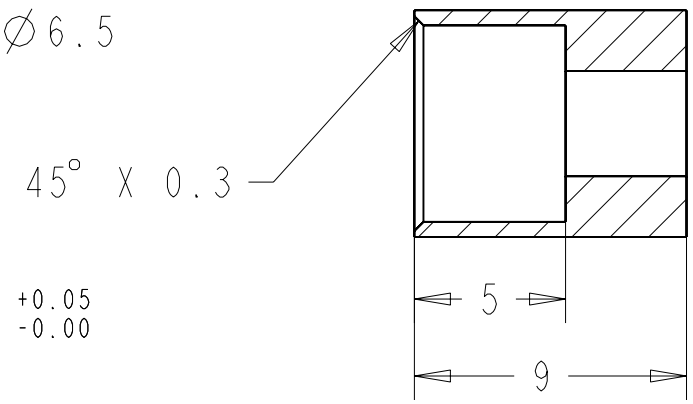

SECTION A-A

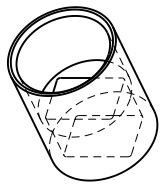

SCALE 2.000

REV	DWG	CHK	DATE	CHANGES	DESCRIPTION	MATERIAL

UNLESS OTHERWISE SPECIFIED

TOLERANCES		
X.X ±0.1	FRAC. ±1/64	
X.XX ±0.01	Angles ±0.50°	
X.XXX ±0.001	FINISH 125 √(μin)	

DO NOT SCALE PRINT

THREADS ARE CLASS 2
CHAMFER ENDS OF ALL SCREW TREADS 30°
CUT ROUND, 1.5 THREAD RELIEF ON MACHINED THREADS
BREAK EDGES .016 MAX. ON MACHINED WORK
REMOVE BURRS, WELD SPLATTER & LOOSE SCALE
IN ACCORDANCE WITH ASME Y14.5M & B46.1

SHOP ORDERS

SER NO.	-		
ACCT NO.		NO. REQD	DATE ISSD -
DEL TO	Eric Anderssen		DATE REQD -
SURFACE TREATMT			
IDENT METHOD	TAG		
PROJECT NUMBER	N/A		
PROJECT NAME	N/A		
DWG BY	David Uken	DATE	05-Jun-00
CHK BY		DATE	
APR BY	Eric Anderssen	DATE	

ERNEST ORLANDO LAWRENCE BERKELEY NATIONAL LABORATORY
UNIVERSITY OF CALIFORNIA - BERKELEY

ATLAS Pixel Detector
TERMINATION FOR SECTOR PROTOTYPE

MICROFILMED:	DWG. TYPE	SHOWN ON	SCALE: 4.000	DO NOT SCALE PRINTS
	PART		SHEET 1 OF 1	
PATENT CLEAR:	DESIGN ACCT. NO.	CATEGORY CODE	DWG. NO. 1	SIZE / REV.

Dwg. File: TERMINATION Model File: TERMINATION_PROTOTYPE

Rev. 1/29/2000 J. R. Osborn

DESCRIPTION	MATERIAL	MAT. LOCATION
		-

Part Number	Description	"A" Thickness
	Original Tubing	3.48
	Reduced Hydraulic Diameter	2.43
	Etched Outer Surface	2.18

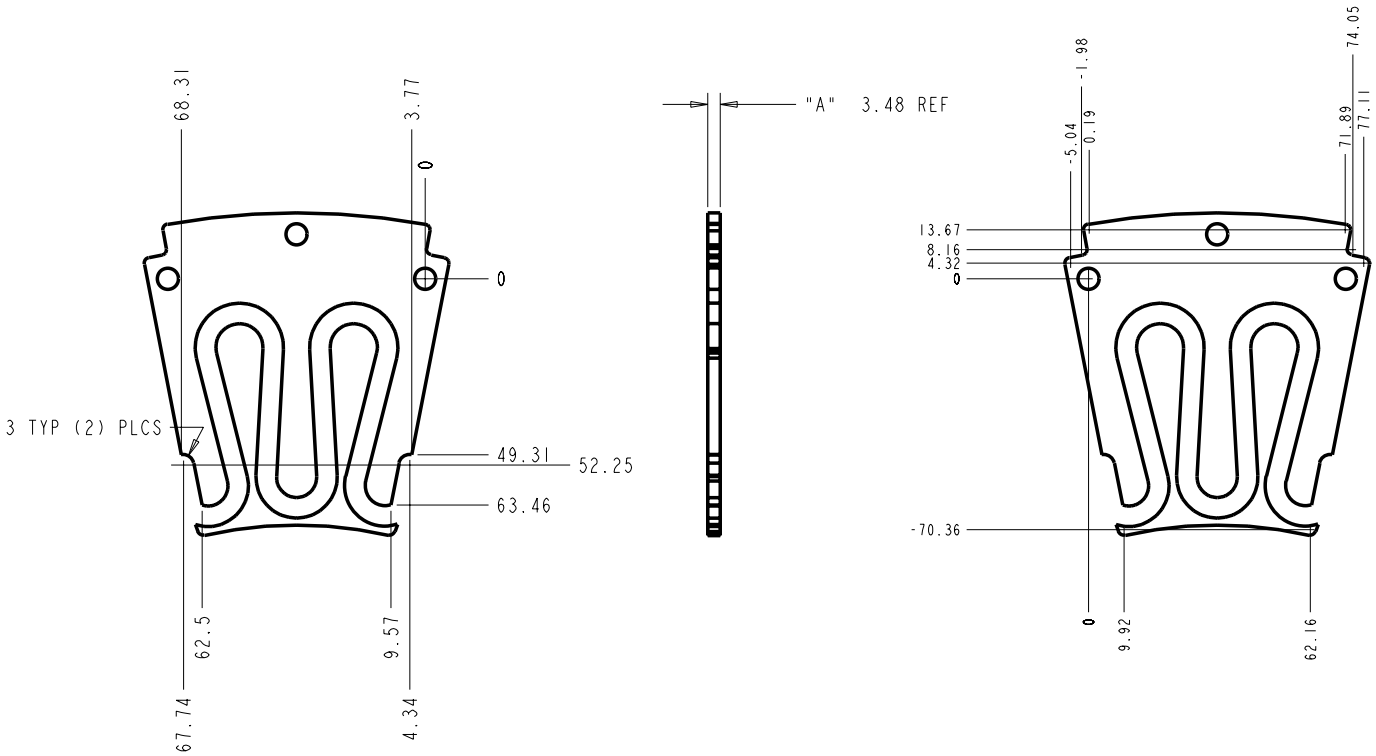

REV	DWG	CHK	ZONE	DATE	CHANGES

UNLESS OTHERWISE SPECIFIED

TOLERANCES		
	X.X ± 0.1	FRAC. ± 1/64
	X.XX ± 0.03	Angles ± 1.00°
	X.XXX ± 0.010	FINISH 125 √(µin)

DO NOT SCALE PRINT

THREADS ARE CLASS 2
CHAMFER ENDS OF ALL SCREW TREADS 30°
CUT ROUND, 1.5 THREAD RELIEF ON MACHINED THREADS
BREAK EDGES .016 MAX. ON MACHINED WORK
REMOVE BURRS, WELD SPLATTER & LOOSE SCALE
IN ACCORDANCE WITH ASME Y14.5M & B46.1

SHOP ORDERS

ACCT NO. 7916-27	NO. REQD 33	SER NO. -	
DEL TO ERIC ANDERSSEN		DATE ISSD -	
		DATE REQD -	
SURFACE TREATMT			
IDENT METHOD TAG			
PROJECT NUMBER N/A			
PROJECT NAME N/A			
DWG BY David Uken		DATE 04-Apr-00	
CHK BY		DATE	
APR BY Eric Anderssen		DATE	

ERNEST ORLANDO LAWRENCE BERKELEY NATIONAL LABORATORY
UNIVERSITY OF CALIFORNIA - BERKELEY

Foam, Perimeter Shape
11-Sector Version
Atlas Detector

MICROFILMED:	DWG. TYPE	SHOWN ON	SCALE: 1.000	DO NOT SCALE PRINTS
	PART		SHEET 1 OF 2	
PATENT CLEAR:	DESIGN ACCT. NO.	CATEGORY CODE	DWG. NO. 3	SIZE / REV. A

DWG. NO. 43 200011 SIZE REV. SH.

Dwg. File: SECTOR 11-FOAM Model File: SECTOR 11-FOAM

DESCRIPTION	MATERIAL	MAT. LOCATION
		-

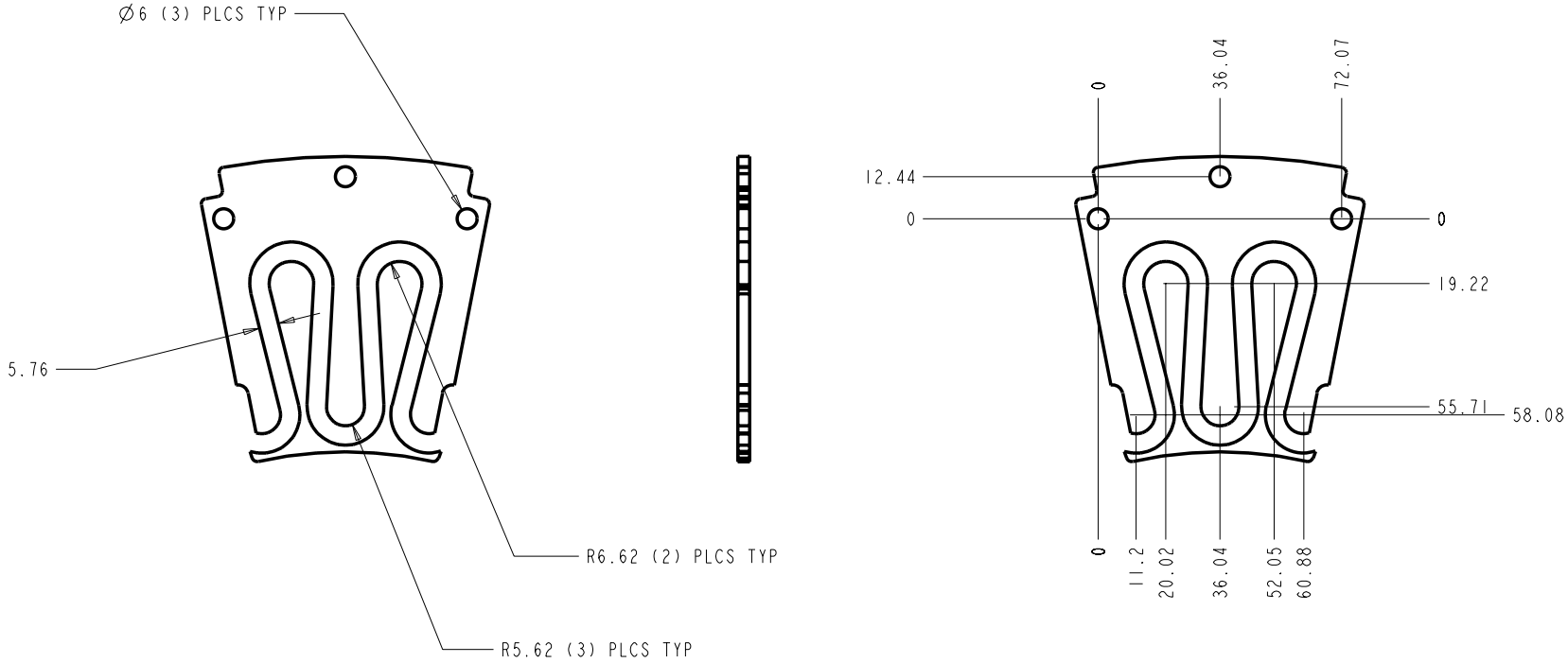

REV	DWG	CHK	ZONE	DATE	CHANGES

UNLESS OTHERWISE SPECIFIED

TOLERANCES		
	X.X ± 0.1	FRAC. ± 1/64
	X.XX ± 0.03	Angles ± 1.00°
	X.XXX ± 0.010	FINISH 125 √(µin)

DO NOT SCALE PRINT

THREADS ARE CLASS 2
CHAMFER ENDS OF ALL SCREW TREADS 30°
CUT ROUND, 1.5 THREAD RELIEF ON MACHINED THREADS
BREAK EDGES .016 MAX. ON MACHINED WORK
REMOVE BURRS, WELD SPLATTER & LOOSE SCALE
IN ACCORDANCE WITH ASME Y14.5M & B46.1

SHOP ORDERS

SER NO.	-		
ACCT NO.	7916-27	NO. REQD	33
DATE ISSD	-		
DEL TO	ERIC ANDERSSEN	DATE REQD	-
SURFACE TREATMT			
IDENT METHOD	TAG		
PROJECT NUMBER	N/A		
PROJECT NAME	N/A		
DWG BY	David Uken	DATE	04-Apr-00
CHK BY		DATE	
APR BY	Eric Anderssen	DATE	

ERNEST ORLANDO LAWRENCE BERKELEY NATIONAL LABORATORY
UNIVERSITY OF CALIFORNIA - BERKELEY

Foam, Interior Cutouts and Holes
11-Sector Version
Atlas Detector

MICROFILMED:	DWG. TYPE	SHOWN ON	SCALE: 1.000	DO NOT SCALE PRINTS
	PART		SHEET 2 OF 2	
PATENT CLEAR:	DESIGN ACCT. NO.	CATEGORY CODE	DWG. NO. 3	SIZE / REV. A

DWG. NO. 43 200011 SIZE REV. SH.

Rev. 1.1a: SECTOR_11_FOAM2 Model 1.1a: SECTOR_11_FOAM2

DWG. NO.	SIZE	REV.	SH.
81	2000	i	1

Part Number	Description	"A"
	Enlarged Hydraulic Diameter	3.48
	Original Tubing	2.43
	Etched Outer Surface	2.18

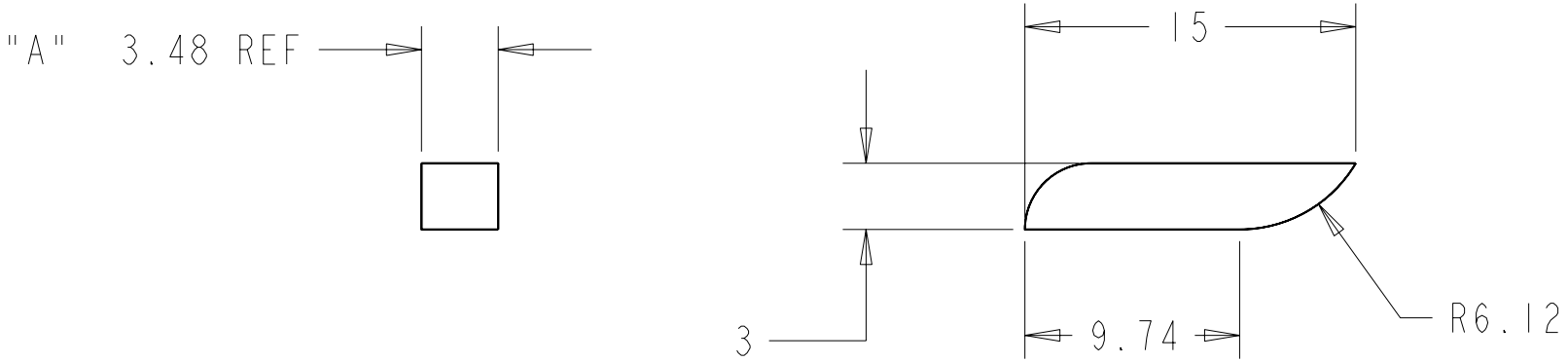

REV	DWG	CHK	DATE	CHANGES	DESCRIPTION	MATERIAL

UNLESS OTHERWISE SPECIFIED

TOLERANCES: X.X ±0.1 | FRAC. ±1/64 | X.XX ±0.01 | Angles ±0.50° | X.XXX ±0.001 | FINISH 125 √(μin)

DO NOT SCALE PRINT

THREADS ARE CLASS 2
CHAMFER ENDS OF ALL SCREW TREADS 30°
CUT ROUND, 1.5 THREAD RELIEF ON MACHINED THREADS
BREAK EDGES .016 MAX. ON MACHINED WORK
REMOVE BURRS, WELD SPLATTER & LOOSE SCALE
IN ACCORDANCE WITH ASME Y14.5M & B46.1

SHOP ORDERS

ACCT NO.	7916-27	NO. REQD	66
DEL TO			
SURFACE TREATMT			
IDENT METHOD	TAG		
PROJECT NUMBER	N/A		
PROJECT NAME	N/A		
DWG BY	David Uken	DATE	04-Apr-00
CHK BY		DATE	
APR BY	Eric Anderssen	DATE	

SER NO. -
DATE ISSD -
DATE REQD -

ERNEST ORLANDO LAWRENCE BERKELEY NATIONAL LABORATORY
UNIVERSITY OF CALIFORNIA - BERKELEY

Support Wedge, Inner
11-Sector Version
Atlas Detector

MICROFILMED:	DWG. TYPE	SHOWN ON	SCALE: 3.000	DO NOT SCALE PRINTS
	PART		SHEET 1 OF 1	
PATENT CLEAR:	DESIGN ACCT. NO.	CATEGORY CODE	DWG. NO. 1	SIZE / REV. A

Dwg. File: SUPPORT_WEDGE_11_INNER Model File: SUPPORT_WEDGE_11_INNER

Rev. 1/29/2000 J. R. Osborn

DWG. NO.	SIZE	REV.	SH.
81	2000	i	1

Part Number	Description	"A"
	Enlarged Hydraulic Diameter	3.48
	Original Tubing	2.43
	Etched Outer Surface	2.18

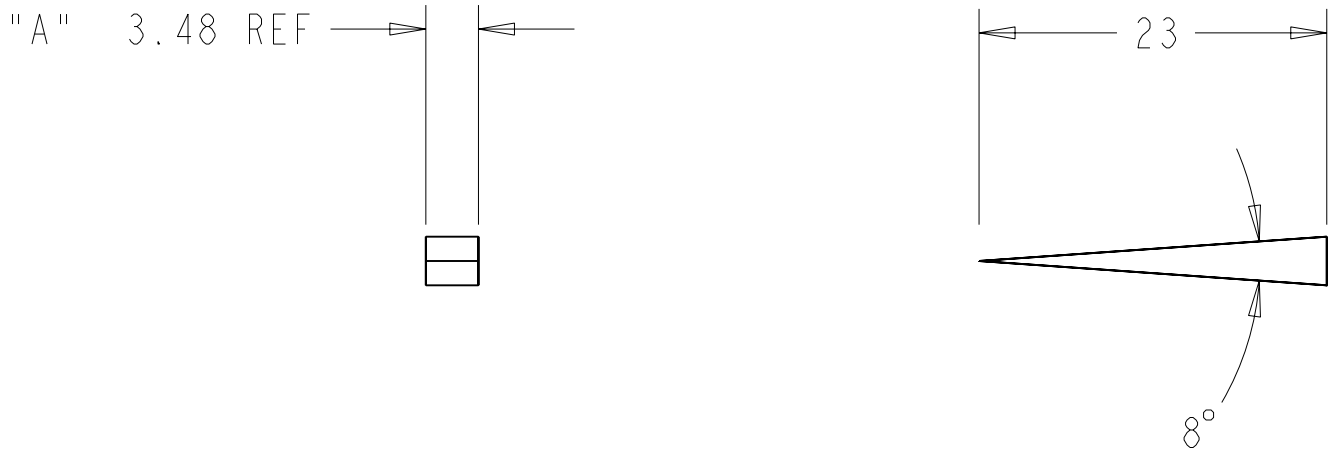

REV	DWG	CHK	DATE	CHANGES

UNLESS OTHERWISE SPECIFIED

TOLERANCES: X.X ±0.1 | FRAC. ±1/64 | X.XX ±0.01 | Angles ±0.50° | X.XXX ±0.001 | FINISH 125√(μin)

DO NOT SCALE PRINT

THREADS ARE CLASS 2
CHAMFER ENDS OF ALL SCREW TREADS 30°
CUT ROUND, 1.5 THREAD RELIEF ON MACHINED THREADS
BREAK EDGES .016 MAX. ON MACHINED WORK
REMOVE BURRS, WELD SPLATTER & LOOSE SCALE
IN ACCORDANCE WITH ASME Y14.5M & B46.1

SHOP ORDERS

ACCT NO.	7916-27	NO. REQD	66
DEL TO			
SER NO.	-		
DATE ISSD	-		
DATE REQD	-		
SURFACE TREATMT			
IDENT METHOD	TAG		
PROJECT NUMBER	N/A		
PROJECT NAME	N/A		
DWG BY	David Uken	DATE	04-Apr-00
CHK BY		DATE	
APR BY	Eric Anderssen	DATE	

DESCRIPTION | MATERIAL

ERNEST ORLANDO LAWRENCE BERKELEY NATIONAL LABORATORY
UNIVERSITY OF CALIFORNIA - BERKELEY

Support Wedge, Outer
11-Sector Version
Atlas Detector

MICROFILMED:	DWG. TYPE	SHOWN ON	SCALE: 2.000	DO NOT SCALE PRINTS
	PART		SHEET 1 OF 1	
PATENT CLEAR:	DESIGN ACCT. NO.	CATEGORY CODE	DWG. NO. 1	SIZE / REV. A

Dwg. File: SUPPORT_WEDGE_11_OUTER Model File: SUPPORT_WEDGE_11_OUTER

Rev. 1/29/2000 J. R. Osborn

DWG. NO.	SIZE	REV.	SH.
1			1

Part Number	Description	"A"
	Enlarged Hydraulic Diameter	3.912
	Original Tubing	2.862
	Etched Outer Surface	2.612

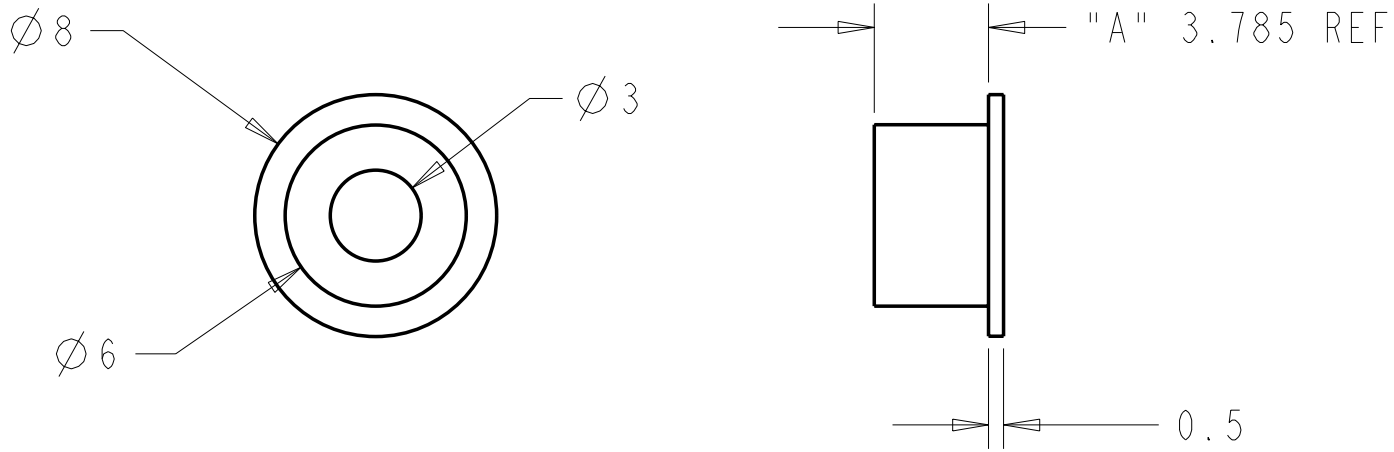

REV	DWG	CHK	DATE	CHANGES	DESCRIPTION	MATERIAL

UNLESS OTHERWISE SPECIFIED

TOLERANCES: X.X ±0.1 | FRAC. ±1/64 | X.XX ±0.03 | Angles ±1.00° | X.XXX ±0.010 | FINISH 125 (µin)

DO NOT SCALE PRINT

THREADS ARE CLASS 2
CHAMFER ENDS OF ALL SCREW TREADS 30°
CUT ROUND, 1.5 THREAD RELIEF ON MACHINED THREADS
BREAK EDGES .016 MAX. ON MACHINED WORK
REMOVE BURRS, WELD SPLATTER & LOOSE SCALE
IN ACCORDANCE WITH ASME Y14.5M & B46.1

SHOP ORDERS

ACCT NO.	NO. REQD	SER NO.	-
DEL TO	Eric Anderssen	DATE ISSD	-
		DATE REQD	-
SURFACE TREATMT			
IDENT METHOD	TAG		
PROJECT NUMBER	N/A		
PROJECT NAME	N/A		
DWG BY	David Uken	DATE	05-Jun-00
CHK BY		DATE	
APR BY	Eric Anderssen	DATE	

ERNEST ORLANDO LAWRENCE BERKELEY NATIONAL LABORATORY
UNIVERSITY OF CALIFORNIA - BERKELEY

ATLAS Pixel Detector

Tee Washer

MICROFILMED:	DWG. TYPE	SHOWN ON	SCALE: 4.000	DO NOT SCALE PRINTS
	PART		SHEET 1 OF 1	
PATENT CLEAR:	DESIGN ACCT. NO.	CATEGORY CODE	DWG. NO. 1	SIZE / REV A

Dwg. File: T_WASHER Model File: T_WASHER

Rev. 1/29/2000 J. R. Osborn

DWG. NO.	SIZE	REV.	SH.
1	2000	i	1

Part Number	Description	"A" Tubing	"B" Sector	"C" Facing
	.432 Facing, Original Tubing	3.48	4.344	.432
	.423 Facing, Reduced Tube	2.43	3.294	.432
	.432 Facing, Etched Tube	2.18	3.044	.432
	.300 Facing, Original Tube	3.48	4.08	.300
	.300 Facing, Reduce Tube	2.43	3.03	.300
	.300 Facing, Etched Tube	2.18	2.78	.300

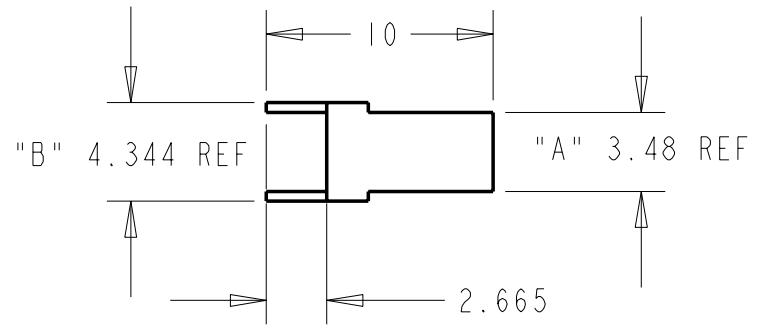

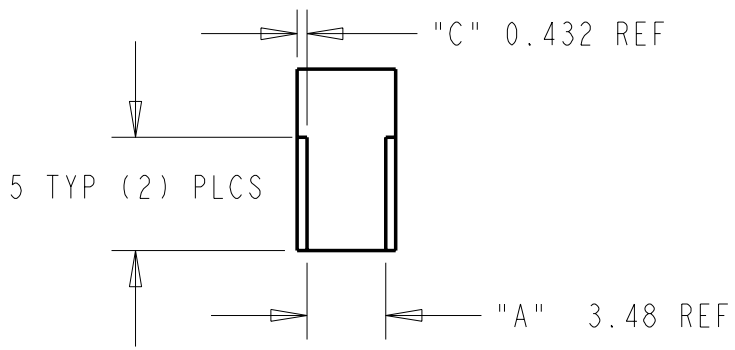

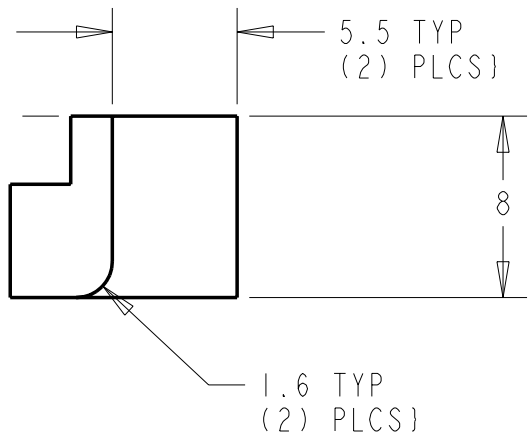

REV	DWG	CHK	DATE	CHANGES	DESCRIPTION	MATERIAL

UNLESS OTHERWISE SPECIFIED

TOLERANCES: X.X ±0.1 FRAC. ±1/64; X.XX ±0.01 Angles ±0.50°; X.XXX ±0.001 FINISH 125 √ (µin)

DO NOT SCALE PRINT

THREADS ARE CLASS 2
CHAMFER ENDS OF ALL SCREW TREADS 30°
CUT ROUND, 1.5 THREAD RELIEF ON MACHINED THREADS
BREAK EDGES .016 MAX. ON MACHINED WORK
REMOVE BURRS, WELD SPLATTER & LOOSE SCALE
IN ACCORDANCE WITH ASME Y14.5M & B46.1

SHOP ORDERS

ACCT NO.	7916-27	NO. REQD	33
DEL TO	Eric Anderssen		
SURFACE TREATMT			
IDENT METHOD	TAG		
PROJECT NUMBER	N/A		
PROJECT NAME	N/A		
DWG BY	David Uken	DATE	07-Apr-00
CHK BY		DATE	
APR BY	Eric Anderssen	DATE	

SER NO. -
DATE ISSD -
DATE REQD -

ERNEST ORLANDO LAWRENCE BERKELEY NATIONAL LABORATORY
UNIVERSITY OF CALIFORNIA - BERKELEY

Atlas Pixel Detector
II-Sector Version
Strain Relief, Left Side of Cooling Tube

MICROFILMED:	DWG. TYPE	SHOWN ON	SCALE: 3.000	DO NOT SCALE PRINTS
	PART		SHEET 1 OF 1	
PATENT CLEAR:	DESIGN ACCT. NO.	CATEGORY CODE	DWG. NO. 1	SIZE / REV. A

Dwg. File: SECTOR_II_STRAINRELIEF_LT Model File: SECTOR_II_STRAINRELIEF_LT

Rev. 1/29/2000 J. R. Osborn