| DWG. NO. | SIZE | REV. | SH. |
|---|---|---|---|
| 21F3822 | | 1 | 1 |

| DESCRIPTION | MATERIAL | MAT. LOCATION |
|---|---|---|
| - | Ti ALLOY 6Al4V | - |

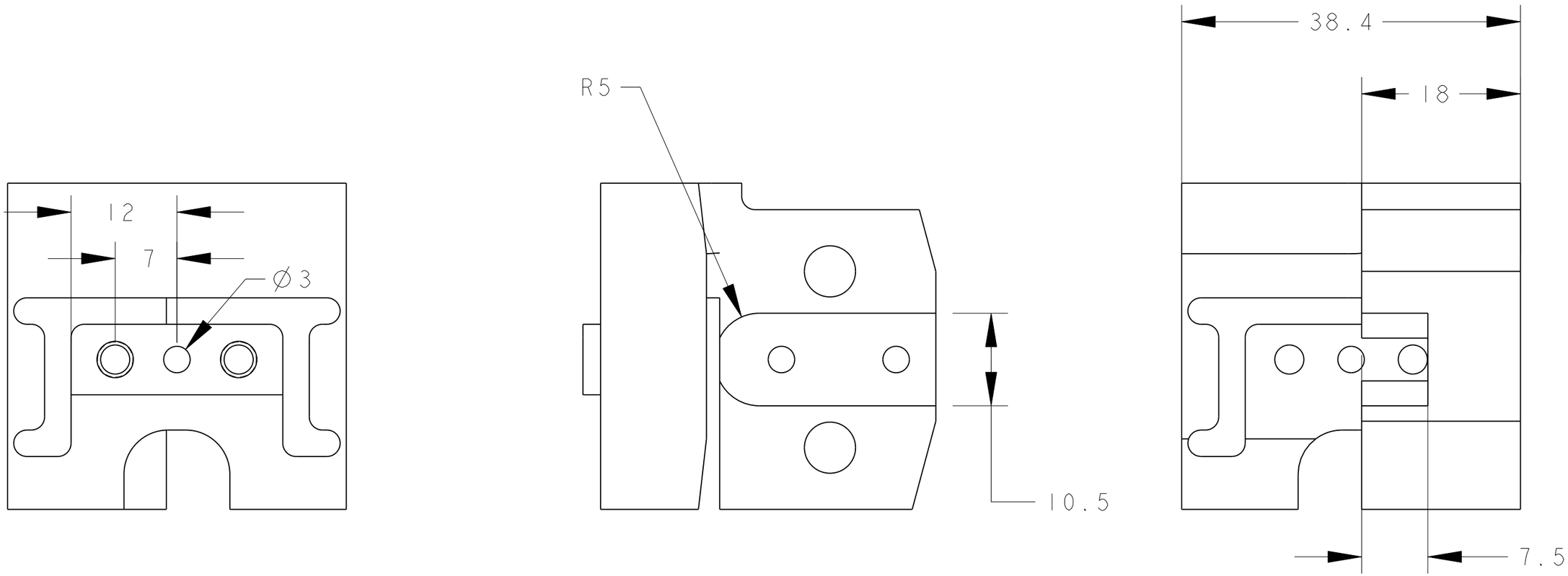


| REV | DWG | CHK | ZONE | DATE | CHANGES |
|---|---|---|---|---|---|

UNLESS OTHERWISE SPECIFIED

| TOLERANCES | | |
|---|---|---|
| | X.X ± 0.5 | FRAC. ± 1/64 |
| | X.XX ± 0.05 | Angles ± 1.00° |
| | X.XXX ± 0.010 | FINISH 125 √(μin) |

DO NOT SCALE PRINT

THREADS ARE CLASS 2
CHAMFER ENDS OF ALL SCREW TREADS 30°
CUT ROUND, 1.5 THREAD RELIEF ON MACHINED THREADS
BREAK EDGES .016 MAX. ON MACHINED WORK
REMOVE BURRS, WELD SPLATTER & LOOSE SCALE
IN ACCORDANCE WITH ASME Y14.5M & B46.1

**SHOP ORDERS**

| | | | |
|---|---|---|---|
| ACCT NO. | NO. REQD | DATE ISSD | - |
| DEL TO | | DATE REQD | - |
| SURFACE TREATMT | - | | |
| IDENT METHOD | TAG | | |
| PROJECT NUMBER | N/A | | |
| PROJECT NAME | US ATLAS | | |
| DWG BY | ANDERSSEN | DATE | 24-May-01 |
| CHK BY | HARTMAN | DATE | |
| APR BY | GILCHRIESE | DATE | |

SER NO. -

US ATLAS (logo)

**ERNEST ORLANDO LAWRENCE BERKELEY NATIONAL LABORATORY**
UNIVERSITY OF CALIFORNIA - BERKELEY

ATLAS PIXEL DETECTOR
PIXEL SUPPORT TUBE SUPPORTS
SCT INTERFACE BLOCK, FLOAT AG

| MICROFILMED: | DWG. TYPE | SHOWN ON | SCALE: 2/1 | DO NOT SCALE PRINTS |
|---|---|---|---|---|
| | PART | nnXnnn | SHEET 1 OF 1 | |
| PATENT CLEAR: | DESIGN ACCT. NO. | CATEGORY CODE | DWG. NO. | SIZE / REV. |
| | PIAP-II | AP6340 | 21F3822 | 1 |

Rev_1/8/2001 ATLAS

Dwg. File: SUP_TUBE_BARREL_FLOAT_MNT_L.DRW Model File: SUP_TUBE_BARREL_FLOAT_MNT_LEFT