KamLAND: Measuring Terrestrial and Solar Neutrinos

^{7}Be solar neutrino

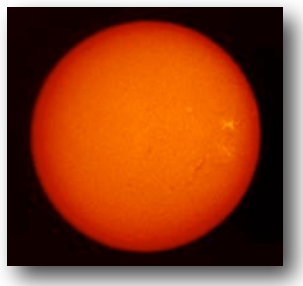

Neutrino Astrophysics

geo-neutrino

Neutrino Geophysics

reactor neutrino

Neutrino Physics

supernova, relic neutrino, solar anti-neutrinos etc.

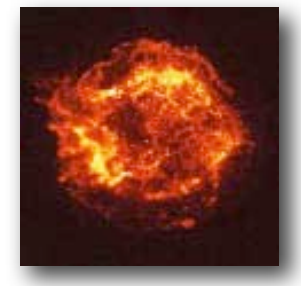

Neutrino Cosmology

Patrick Decowski

UC Berkeley

&

NIKHEF, Amsterdam

for the KamLAND Collaboration

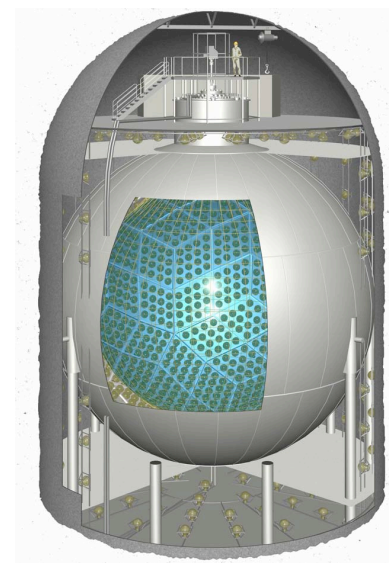

Measuring Neutrino Oscillation using Reactors

Neutrino Oscillation

The flavor eigenstates that neutrinos are born in, may not necessarily be the mass eigenstates:

$$|\nu_l\rangle = \sum_{i=1}^{3} U_{li}|\nu_i\rangle; \quad l = e, \mu, \tau$$

where,

$$U_{MNSP} = \begin{pmatrix} U_{e1} & U_{e2} & U_{e3} \\ U_{\mu 1} & U_{\mu 2} & U_{\mu 3} \\ U_{\tau 1} & U_{\tau 2} & U_{\tau 3} \end{pmatrix}$$

Maki, Nakagawa, Sakata, Pontecorvo

$$= \underbrace{\begin{pmatrix} 1 & 0 & 0 \\ 0 & c_{23} & s_{23} \\ 0 & -s_{23} & c_{23} \end{pmatrix}}_{\text{atmospheric/accelerator } \nu} \underbrace{\begin{pmatrix} c_{13} & 0 & s_{13}e^{-i\delta_D} \\ 0 & 1 & 0 \\ -s_{13}e^{i\delta_D} & 0 & c_{13} \end{pmatrix}}_{\text{reactor/accelerator } \nu} \underbrace{\begin{pmatrix} c_{12} & s_{12} & 0 \\ -s_{12} & c_{12} & 0 \\ 0 & 0 & 1 \end{pmatrix}}_{\text{solar/reactor } \nu}$$

Assuming that the neutrinos are moving relativistically through space:

$$|\nu_i\rangle = e^{-i\frac{m_i^2 L}{2E}}|\nu_i(L=0)\rangle$$

We will only consider two neutrino oscillation here

Neutrino Oscillation

The flavor eigenstates that neutrinos are born in, may not necessarily be the mass eigenstates:

$$|\nu_l\rangle = \sum_{i=1}^{3} U_{li}|\nu_i\rangle; \quad l = e, \mu, \tau$$

where,

$$U_{MNSP} = \begin{pmatrix} U_{e1} & U_{e2} & U_{e3} \\ U_{\mu 1} & U_{\mu 2} & U_{\mu 3} \\ U_{\tau 1} & U_{\tau 2} & U_{\tau 3} \end{pmatrix}$$

Maki, Nakagawa, Sakata, Pontecorvo

$$= \underbrace{\begin{pmatrix} 1 & 0 & 0 \\ 0 & c_{23} & s_{23} \\ 0 & -s_{23} & c_{23} \end{pmatrix}}_{\text{atmospheric/accelerator } \nu} \underbrace{\begin{pmatrix} c_{13} & 0 & s_{13}e^{-i\delta_D} \\ 0 & 1 & 0 \\ -s_{13}e^{i\delta_D} & 0 & c_{13} \end{pmatrix}}_{\text{reactor/accelerator } \nu} \underbrace{\begin{pmatrix} c_{12} & s_{12} & 0 \\ -s_{12} & c_{12} & 0 \\ 0 & 0 & 1 \end{pmatrix}}_{\text{solar/reactor } \nu}$$

Assuming that the neutrinos are moving relativistically through space:

$$|\nu_i\rangle = e^{-i\frac{m_i^2 L}{2E}}|\nu_i(L=0)\rangle$$

We will only consider two neutrino oscillation here

Reactor Neutrino Experiments

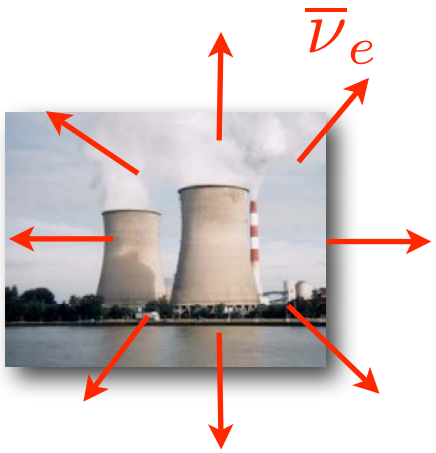

$\overline{\nu}_e$?→

$\overline{\nu}_x$?→

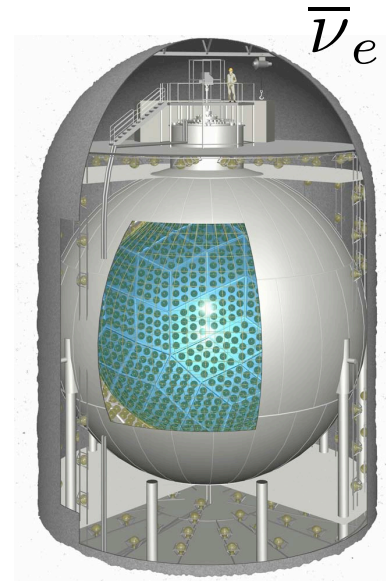

$$P(\overline{\nu}_e \to \overline{\nu}_e) = 1 - \sin^2 2\theta \, \sin^2 \frac{1.27 \Delta m^2 L}{E}$$

L

Few MeV anti-neutrinos, energy too low to produce μ or τ

➡ disappearance experiments

Detected Reactor Spectrum

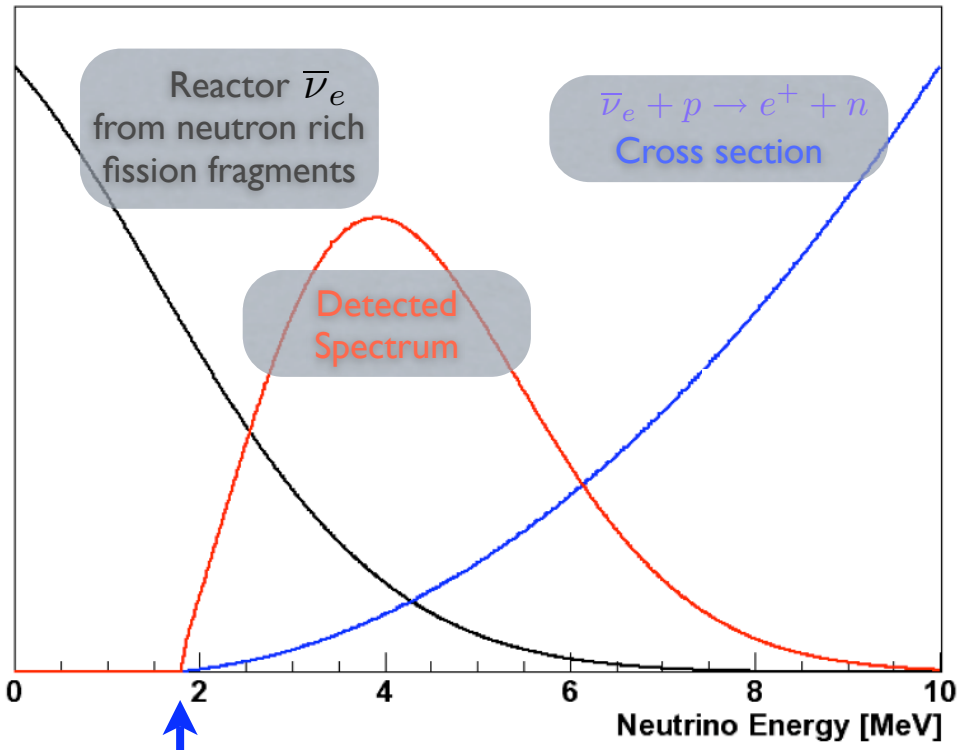

1.8MeV threshold in Inverse Beta Decay

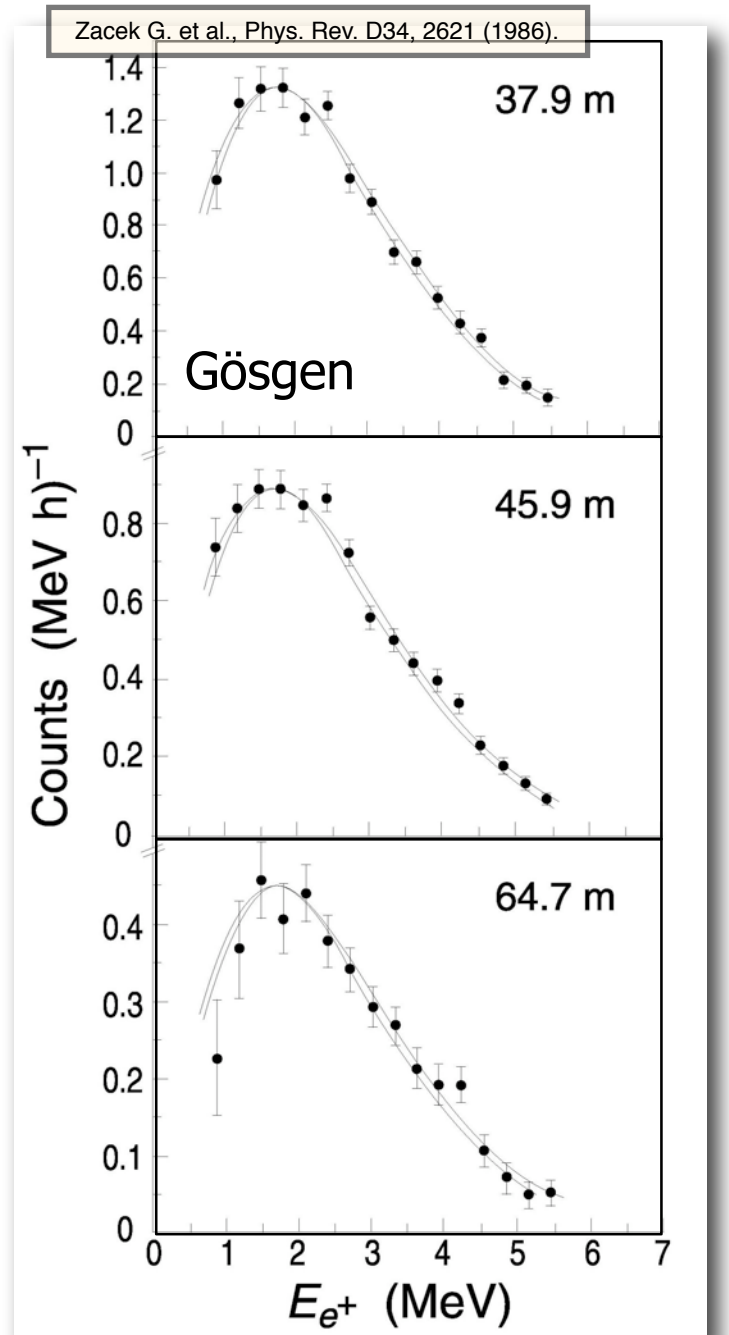

- In practice, only 1.5 neutrinos/fission detectable
- Calculated spectrum has been verified to 2% accuracy in past reactor experiments

No near detector necessary!

Anti-Neutrino Detection Method

Reaction process: Inverse beta decay

$$\overline{\nu}_e + p \rightarrow e^+ + n$$
$$\downarrow$$
$$n + p \rightarrow d + \gamma$$

Scintillator is both target and detector

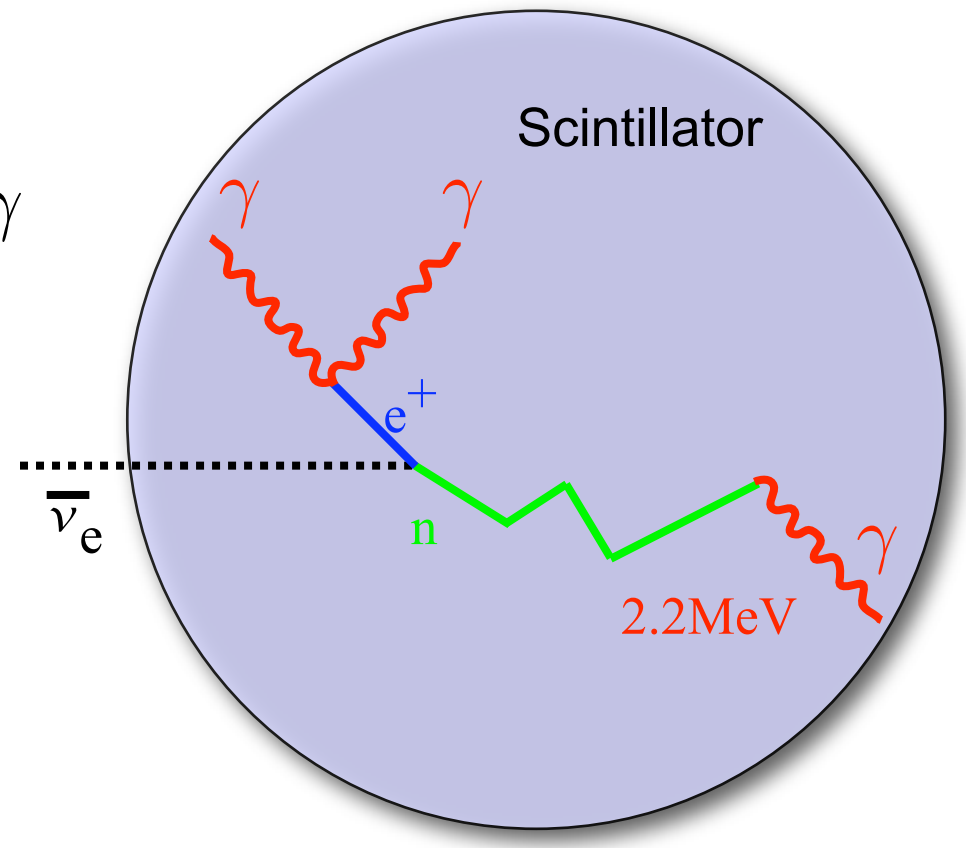

- Distinct two step process:
  - prompt event: positron

    $$E_{\overline{\nu}_e} \simeq E_{prompt} + 0.8MeV$$
  - delayed event: neutron capture after ~210μs
    - 2.2 MeV gamma

Delayed coincidence: good background rejection

$\overline{\nu}_e$ from 53 Reactor Cores in Japan

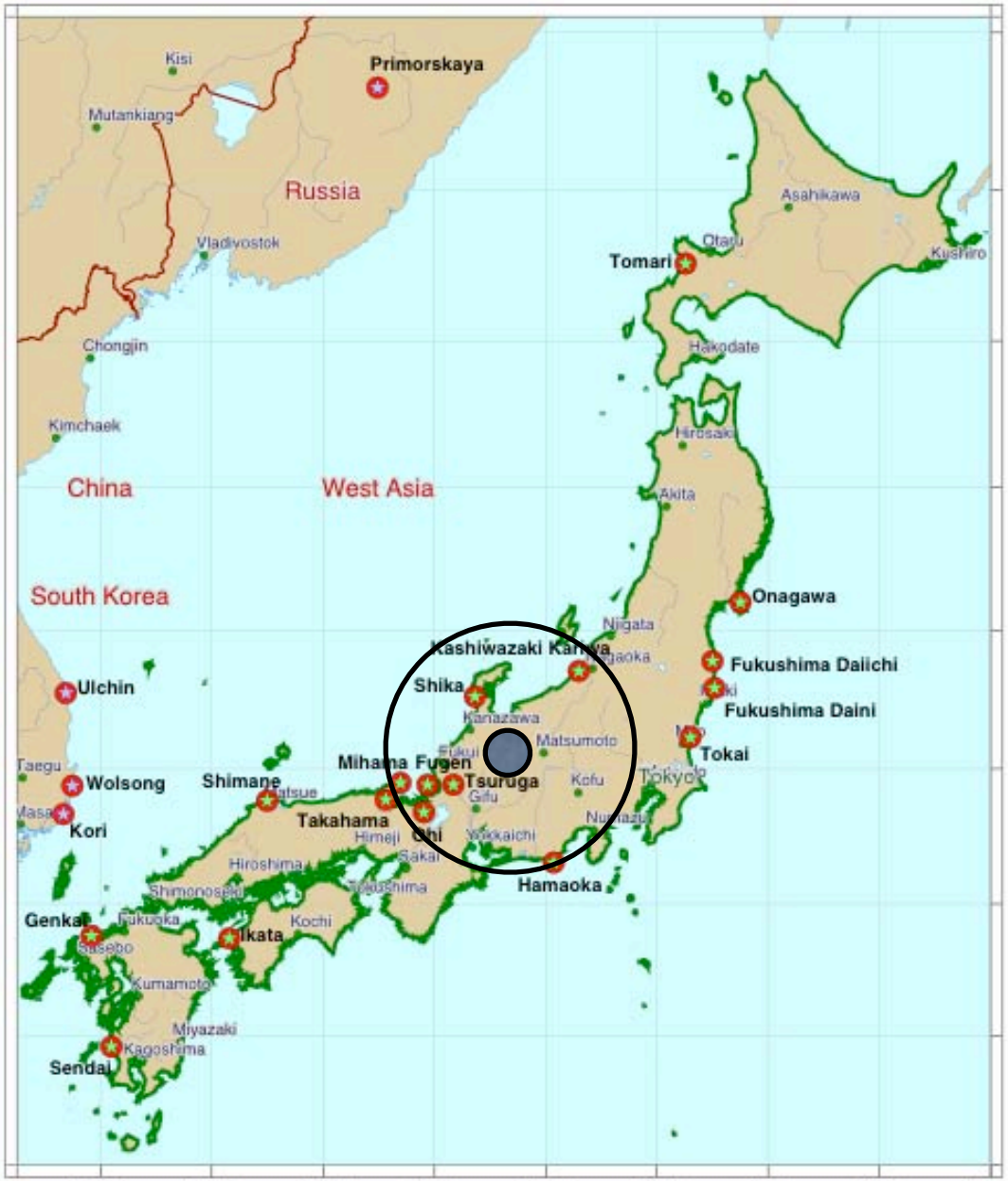

70 GW (7% of world total) is generated at 130-220 km distance from Kamioka.

Reactor neutrino flux: ~6×10^{6} $cm^{-2}s^{-1}$

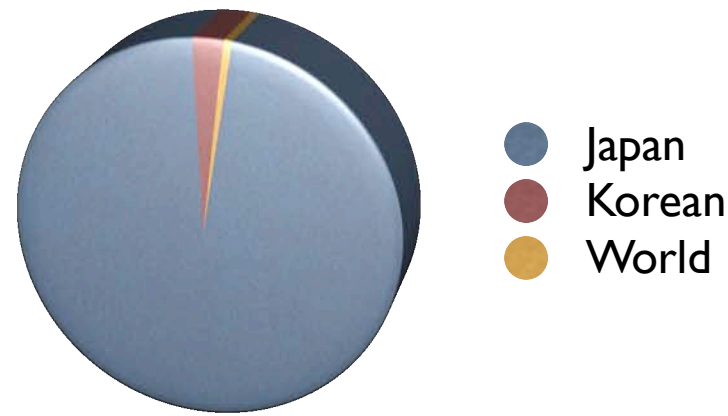

Effective distance ~180km

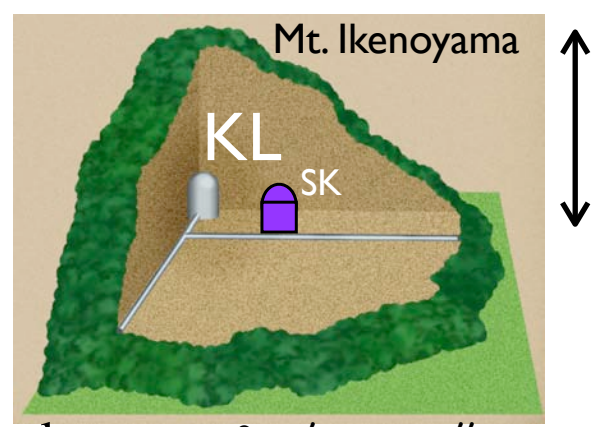

1000m rock
= 2700 mwe

long. $137°18'43.495''$
lat. $36°25'35.562''$
alt. $358\,\mathrm{m}$

7

KamLAND detector

- 1 kton Scintillation Detector
  - 6.5m radius balloon filled with:
    - 20% Pseudocumene (scintillator)
    - 80% Dodecane (oil)
    - PPO
- 34% PMT coverage
  - ~1300 17” fast PMTs
  - ~550 20” large PMTs
- Multi-hit, deadtime-less electronics
- Water Cherenkov veto counter

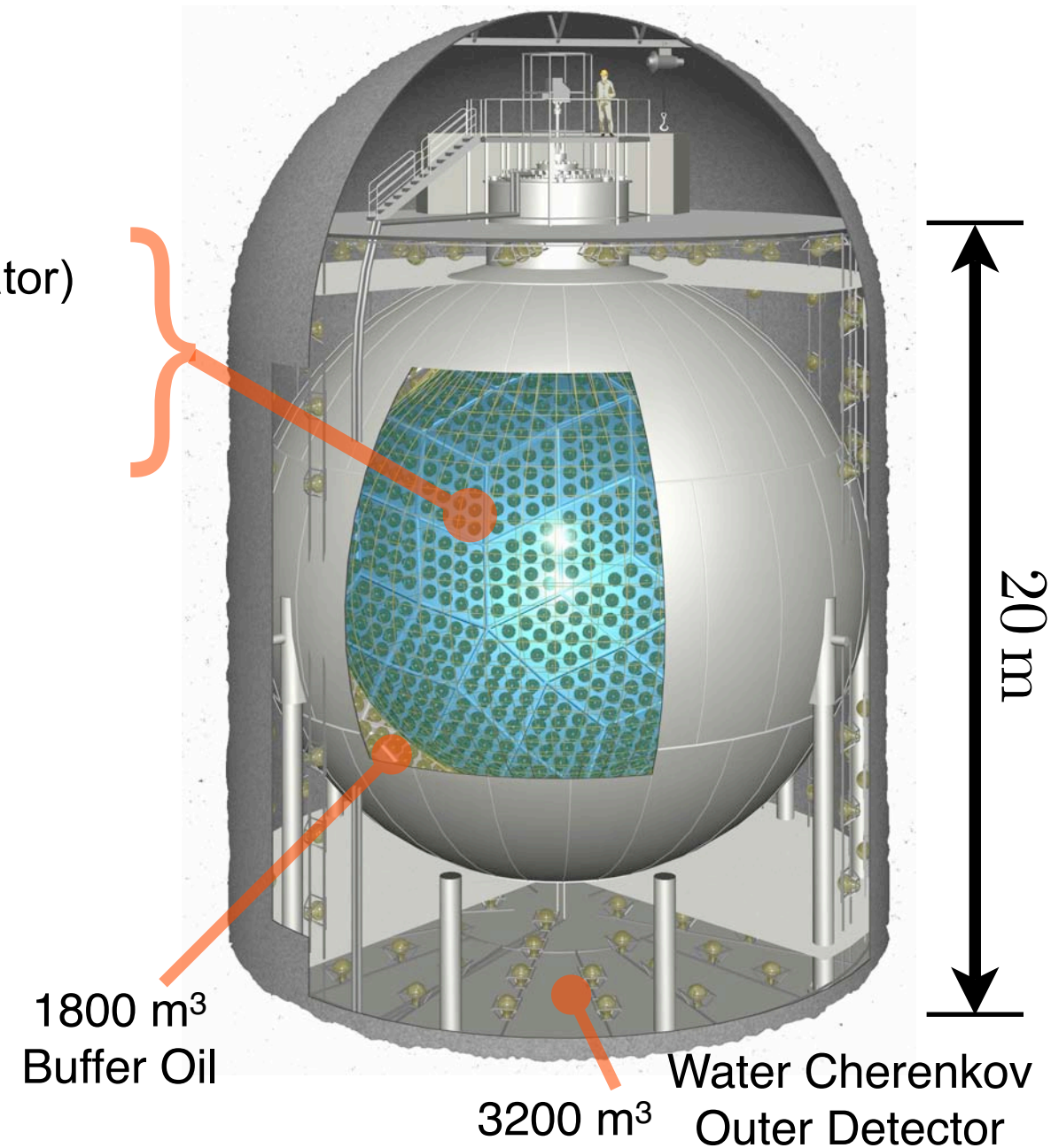

KamLAND Physics Capabilities

0.4 | 1.0 | 2.6 | 8.5 | Energy [MeV]

neutrino electron elastic scattering
$\nu + e^- \rightarrow \nu + e^-$

inverse beta decay $\bar{\nu}_e + p \rightarrow e^+ + n$

^{7}Be solar neutrino

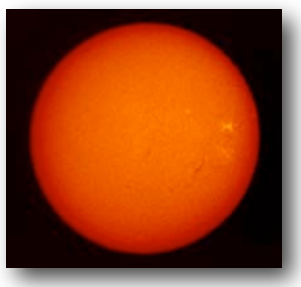

Neutrino Astrophysics

Verification of SSM

geo-neutrino

Neutrino Geophysics

Study of earth heat model

reactor neutrino

Neutrino Physics

Precision measurement of oscillation parameters

supernova, relic neutrino, solar anti-neutrinos etc.

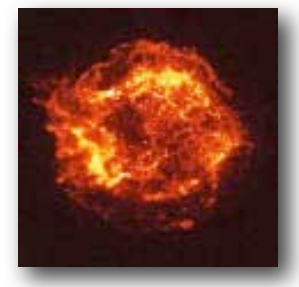

Neutrino Cosmology

Verification of universe evolution, SSM

Geoneutrinos
Nature 436, 499 (2005).

1st reactor result
PRL 90 021802 (2003).

2nd reactor result
PRL 94 081802 (2005).

Solar $\bar{\nu}_e$
PRL 92 071301 (2004).

Future
Low background phase

Systematic Uncertainties

Uncertainty	%
Fiducial volume	4.7
Energy threshold	2.3
Cuts efficiency	1.6
Live time	0.1
Reactor thermal power	2.1
Fuel composition	1.0
Anti-neutrino spectra	2.5
Cross section	0.2
Total uncertainty	6.5

Future improvements

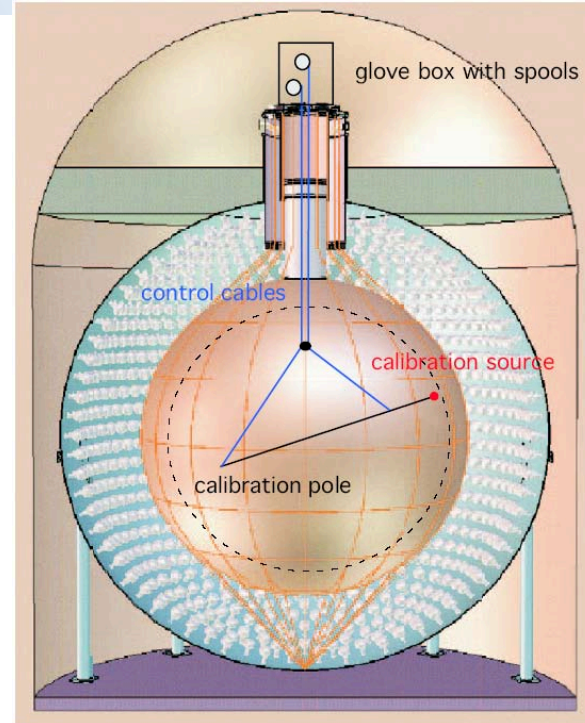

Recent Full Volume Calibration

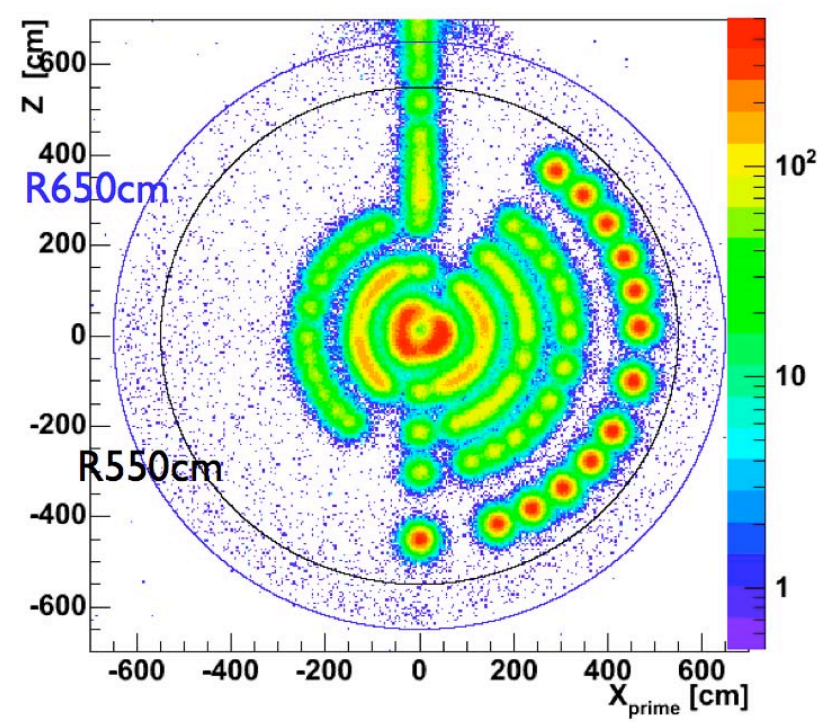

Recent Full Volume calibration will help us bring down the largest syst. uncert.

Range of radioactive sources:
^{203}Hg, ^{68}Ge, ^{60}Co, ^{241}Am^{9}Be, ^{210}Po^{13}C

Energy Spectrum

Dataset from 9 Mar 2002 to 11 Jan 2004
515.1 live days, 766.3 ton-year exposure

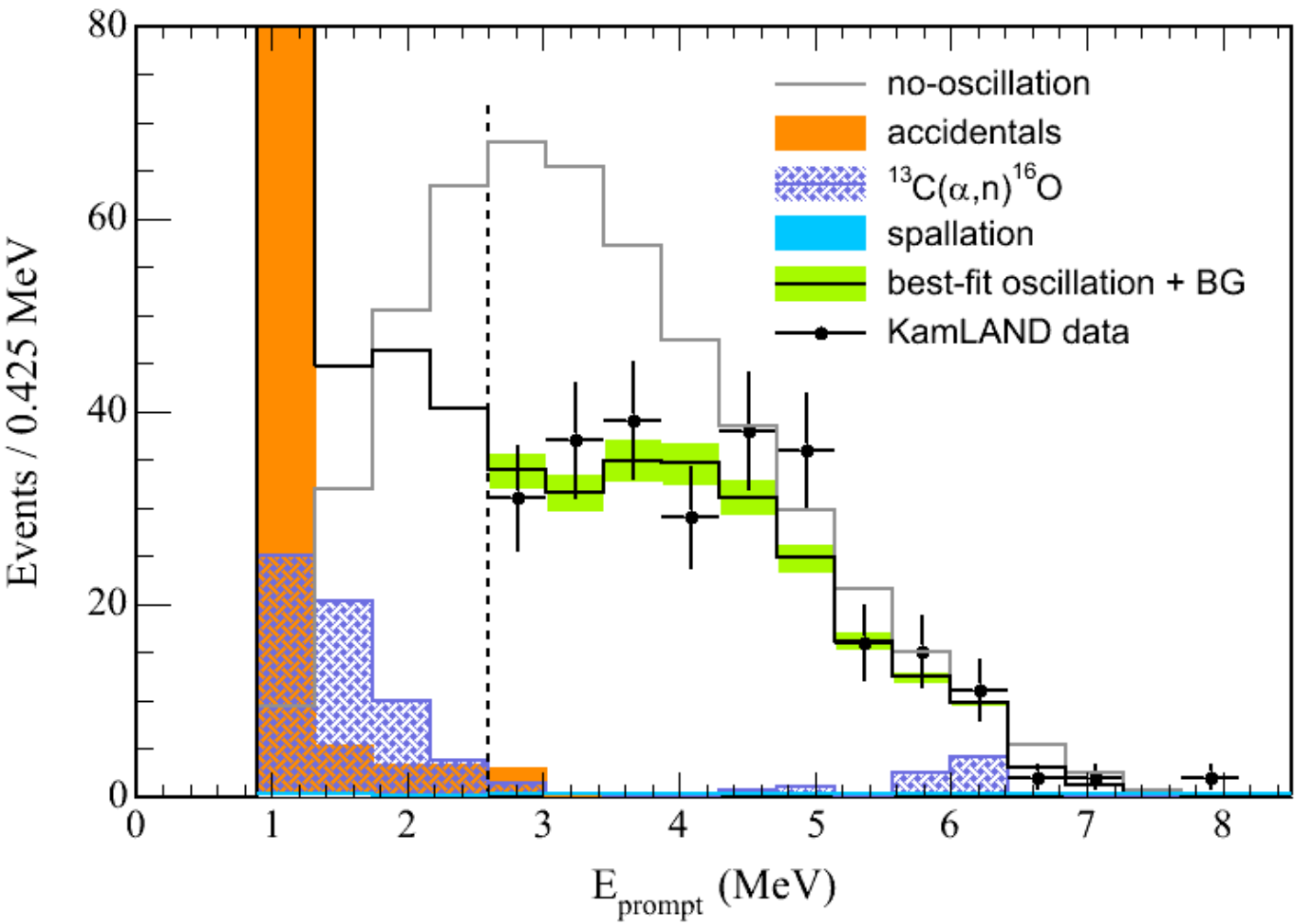

Best-fit oscillation:

$$\tan^2\theta = 0.46$$

$$\Delta m^2 = 7.9^{+0.6}_{-0.5} \times 10^{-5} eV^2$$

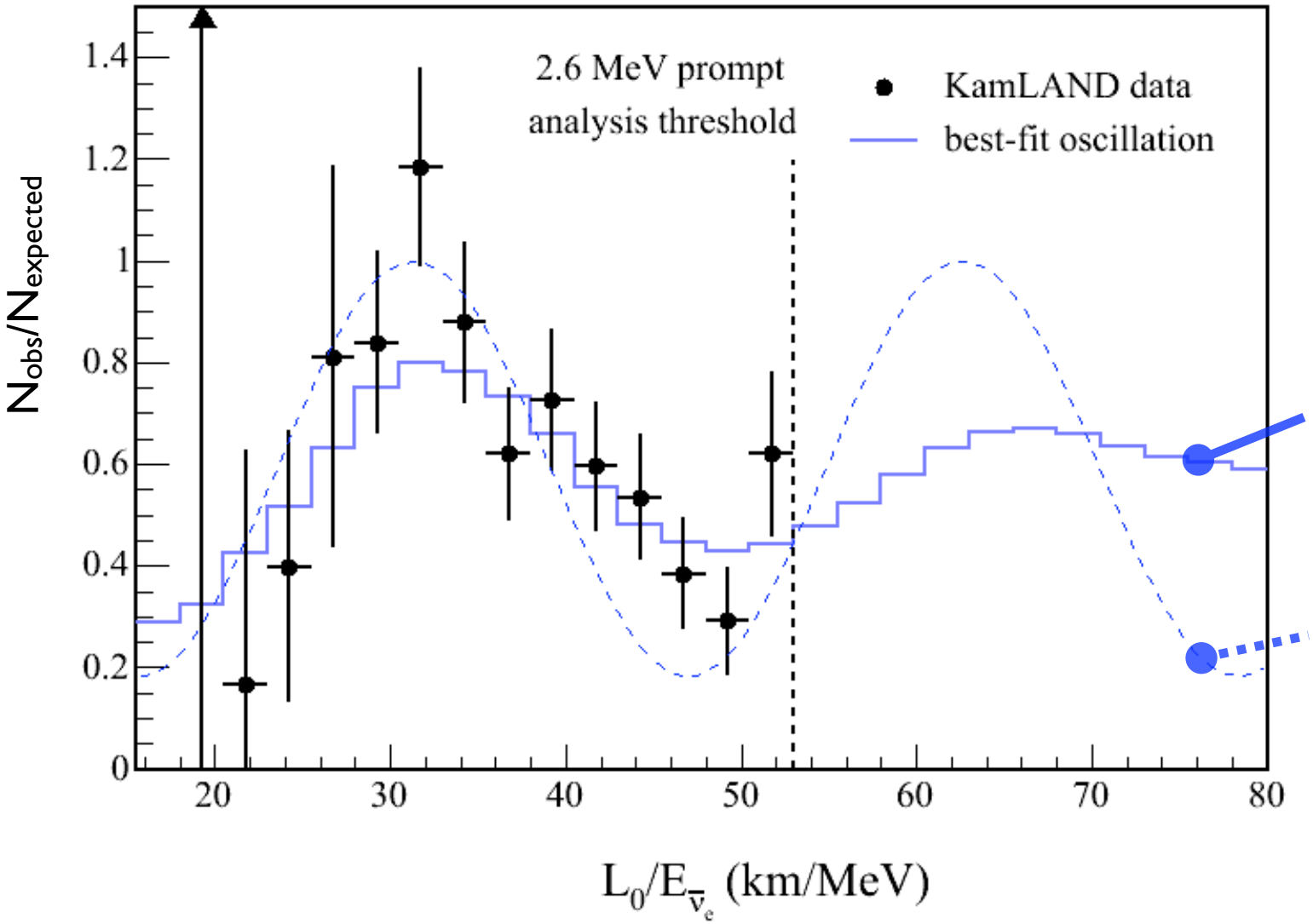

Best-fit oscillation accounting for energy spectrum and reactor distribution

Oscillation pattern for a $\overline{\nu}_e$ of 4 MeV energy

Ratio of measured to expected no-oscillation spectrum

$$P_{ee} = 1 - \sin^2 2\theta \sin^2\left(\frac{\Delta m^2}{4}\frac{L}{E}\right)$$

KamLAND + Solar Results

KamLAND Only

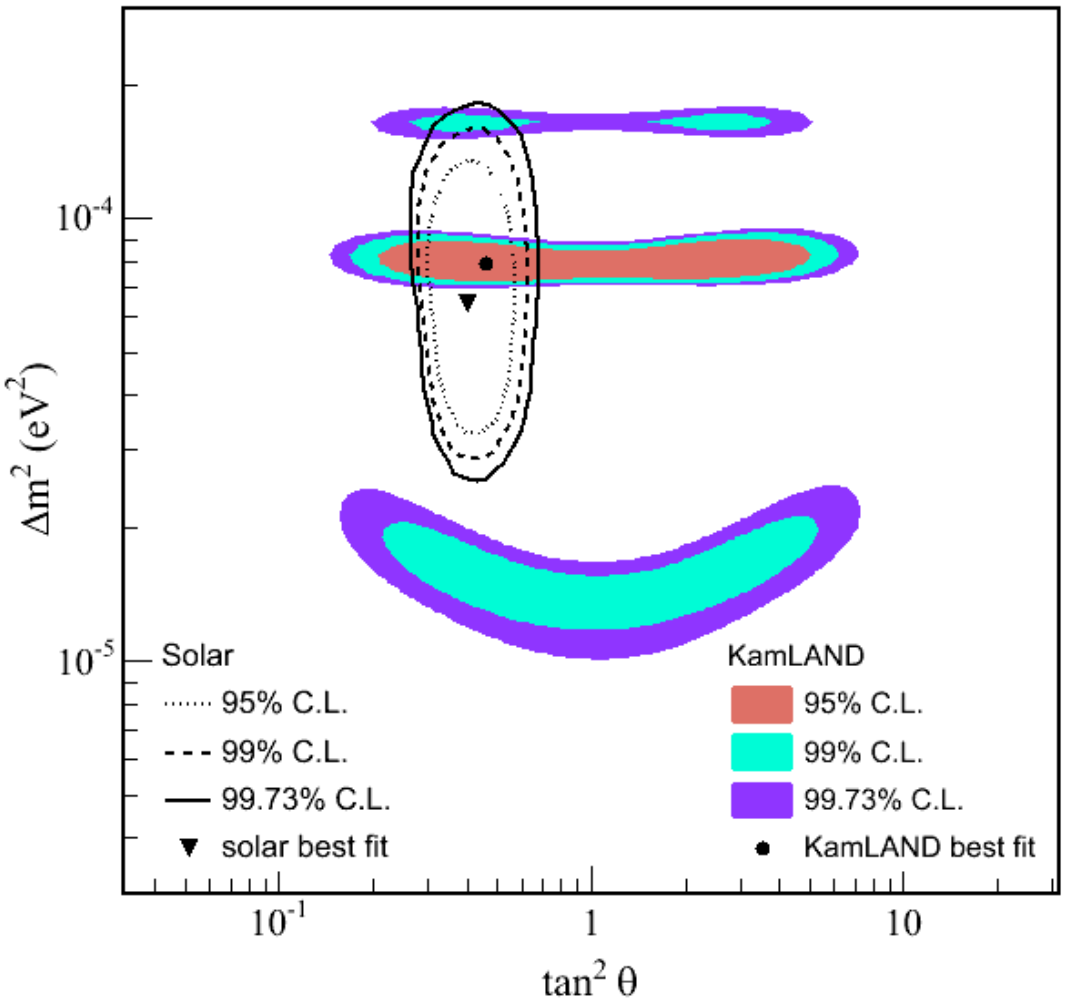

Solar Experiments are sensitive to θ

KamLAND is most sensitive to Δm^2

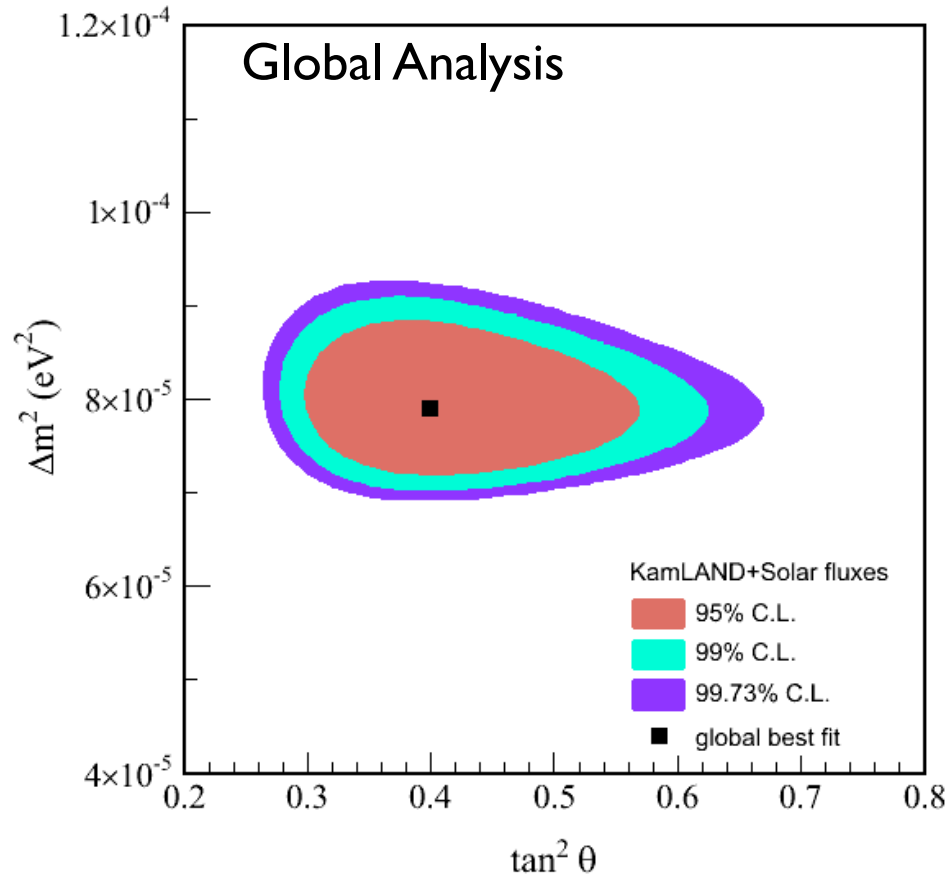

Including SNO salt results:

$$\tan^2\theta = 0.45^{+0.09}_{-0.07}$$

$$\Delta m^2 = 8.0^{+0.6}_{-0.4} \times 10^{-5} eV^2$$

Reactor Flux Variations

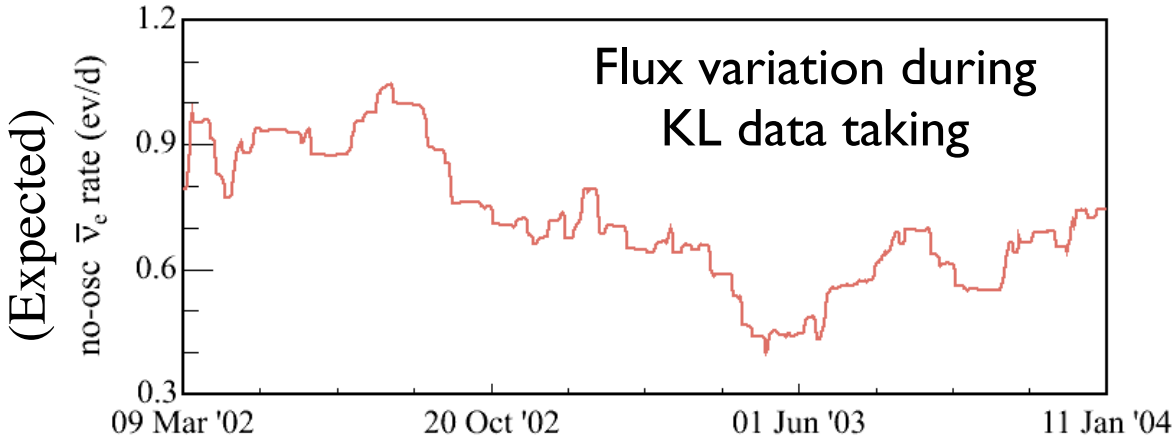

Statistics not good enough to make firm statements on correlation or georeactor

Georeactor < 19TW at 90% C.L.

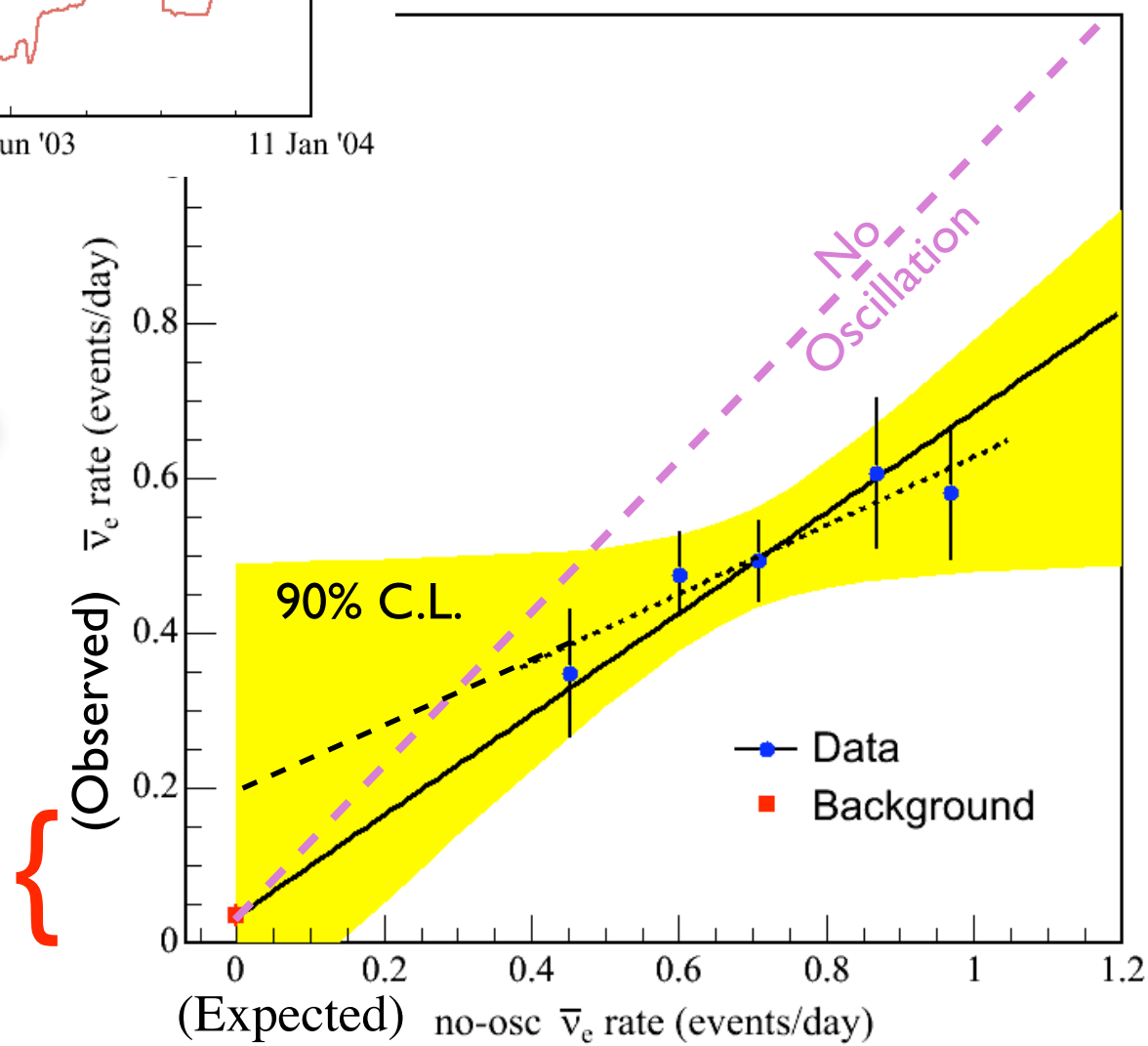

Can KamLAND Detect a Nuclear Test?

North Korea tested a nuclear device on Oct 9, 2006: can KamLAND detect a test of a nuclear weapon?

- Assume a test of a Hiroshima size bomb (~15kton TNT) or ~10 kg of fissile material
  - Larger bombs are detectable by other means
- Further assume:
  - All material is fully fissioned
  - Distance is ~1000km from KamLAND (across the Japanese Sea)
- Typical 3GW (thermal) reactor has a few tons of fissile material burned up in a cycle of ~18months → 10kg/day
- KamLAND measures anti-neutrinos from 53 1GW size reactors, at a an avg. distance of ~200km → rate of ~1 anti-neutrino/day

A small nuclear device will generate <0.001 of an additional anti-neutrino event in KamLAND

Geoneutrino Results

Geoneutrinos

Heat-flow

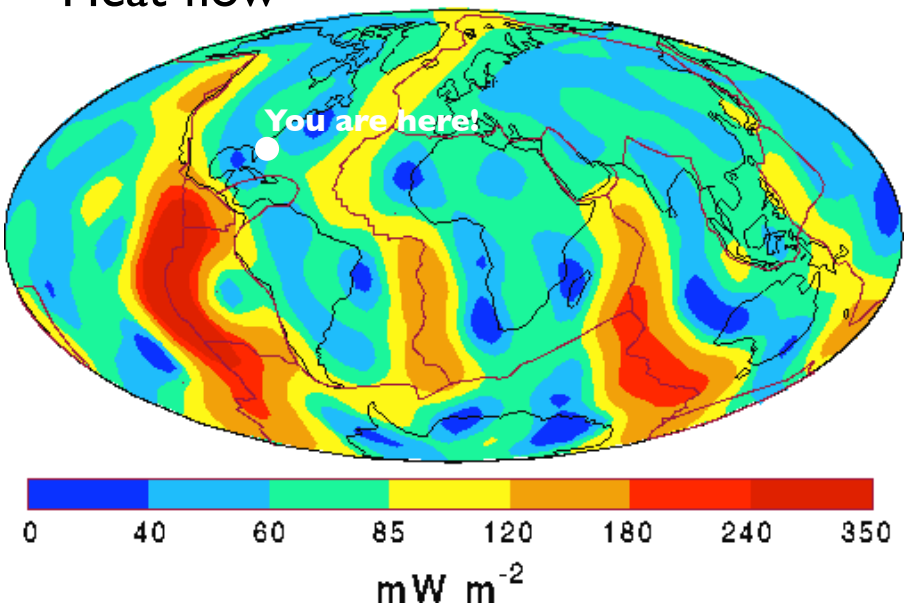

Total Earth heat-flow:

30-40TW

Where does the heat come from?

- Radioactive decays: ^{40}K, ^{232}Th, ^{238}U must contribute a significant fraction
- Anti-neutrinos from ^{232}Th and ^{238}U decays visible in KamLAND
- Reactor neutrinos main background
- Use KamLAND to measure radiogenic heat contribution

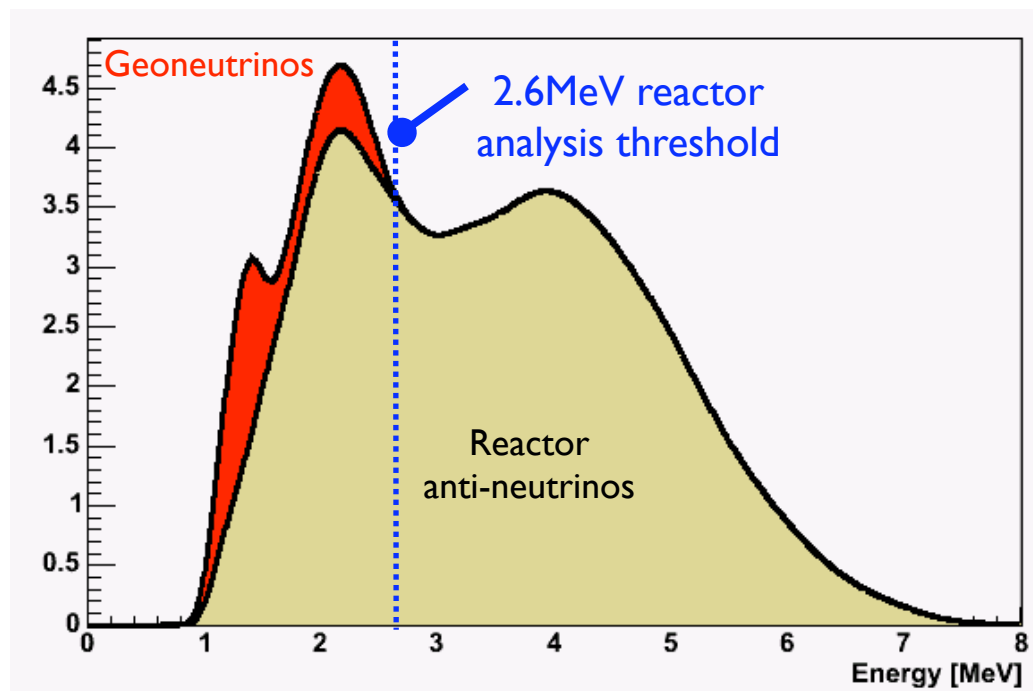

Geoneutrino Results

- For 749 days of livetime
- "Rate" result
  - Observed: 152 events
  - Background: 127 ± 13 ev
  - Geoneutrinos: 25^{+19}_{-18}
- "Shape" result
  - Central value: 28
  - ~2 sigma effect

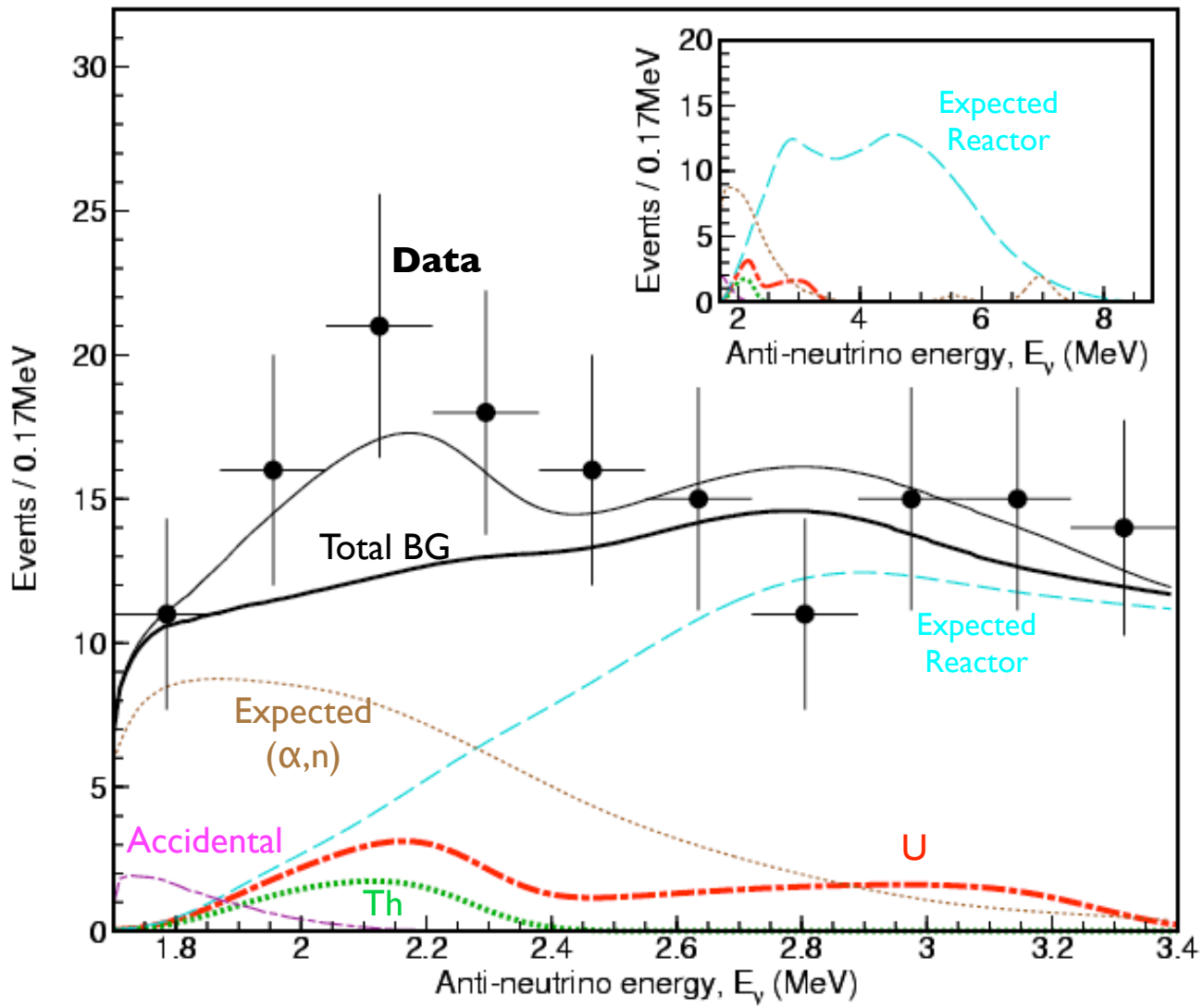

Current data limit radiogenic heat to < 160TW

KamLAND Future: Low Background Phase

Solar ^{7}Be Measurement

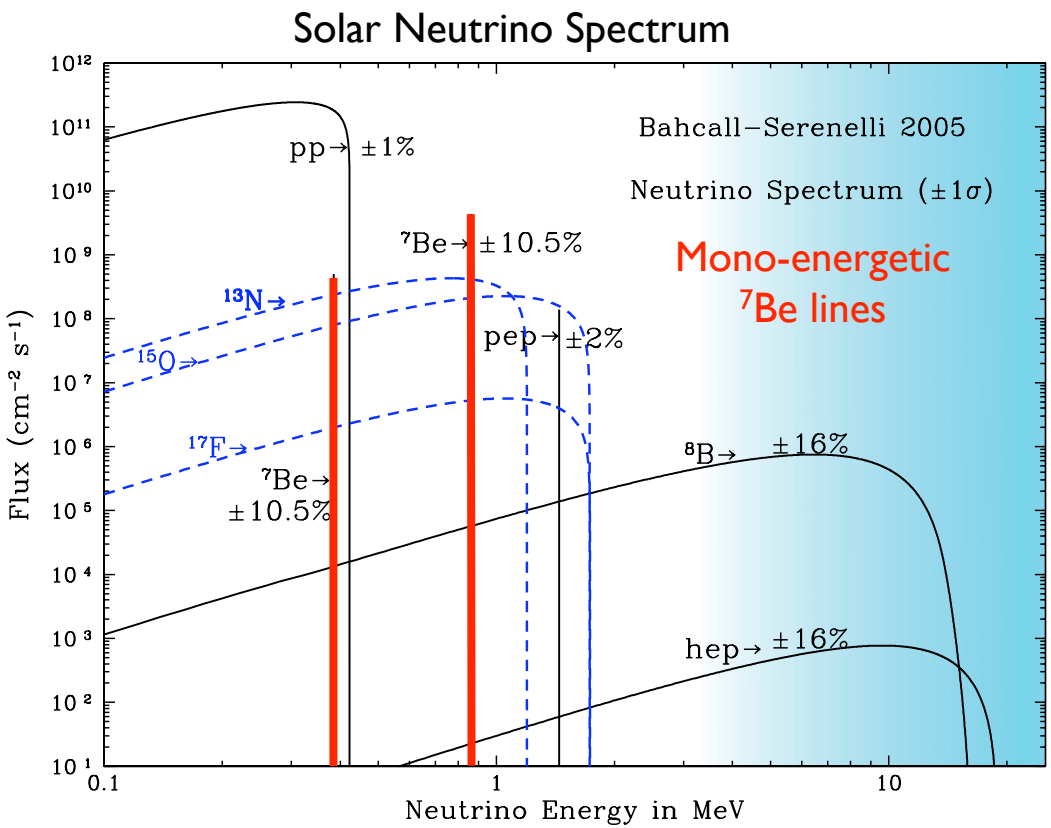

Test the Standard Solar Model:

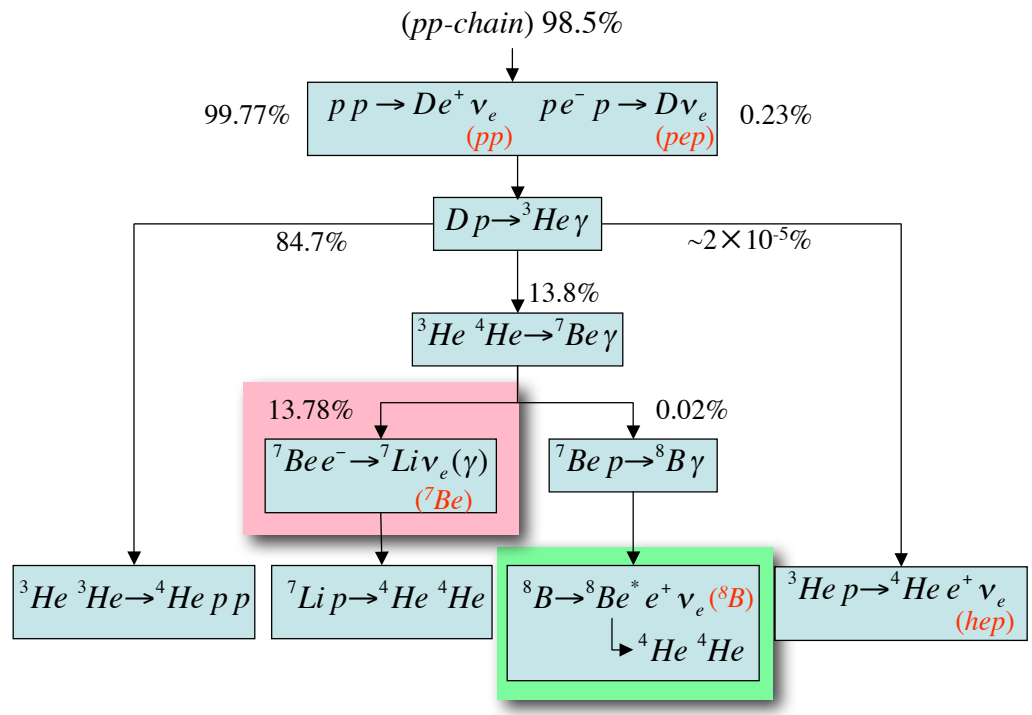

^{7}Be ~14% ^{8}B ~0.02%

- Test the Standard Solar Model
  - ^{7}Be neutrino flux is the largest uncertainty in SSM

Testing LMA-MSW

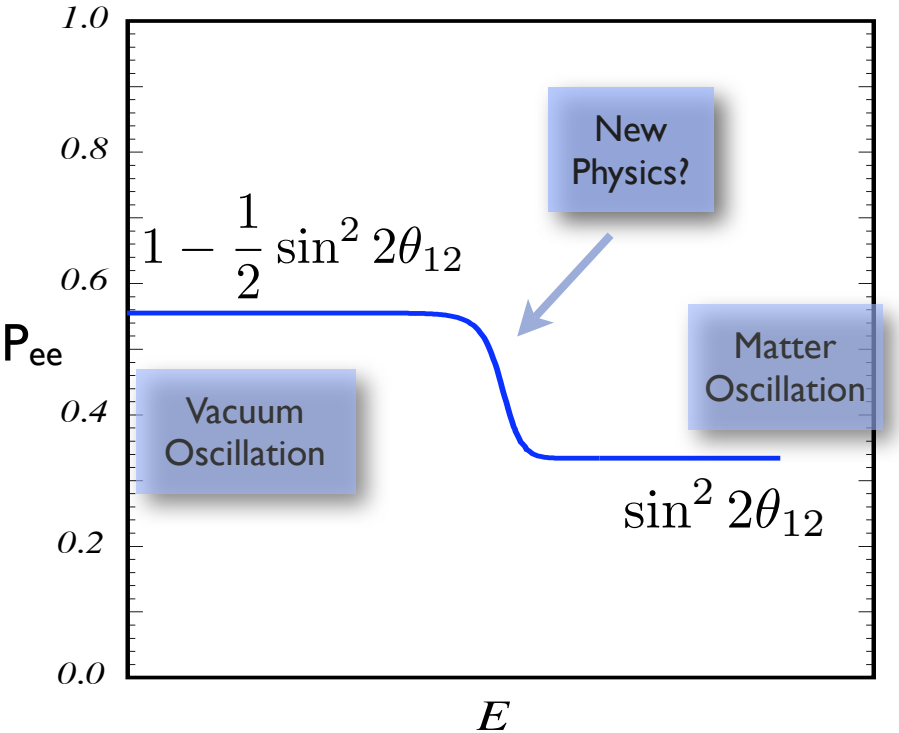

Non Standard Interactions?

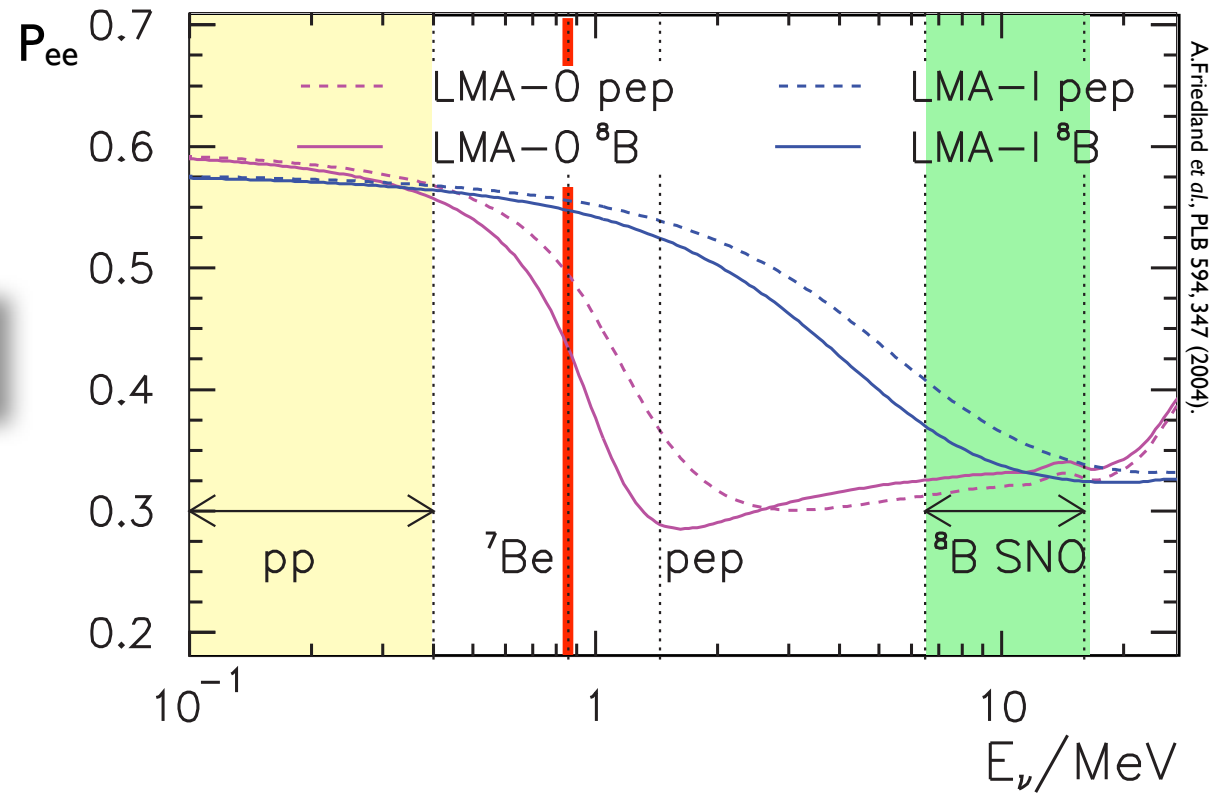

- Test LMA-MSW
  - For ^{8}B neutrinos matter resonance largest effect
  - For ^{7}Be vacuum oscillations is most important
- What happens in the transition region? Sensitivity to new physics
- Need a ~5% measurement

Internal Background

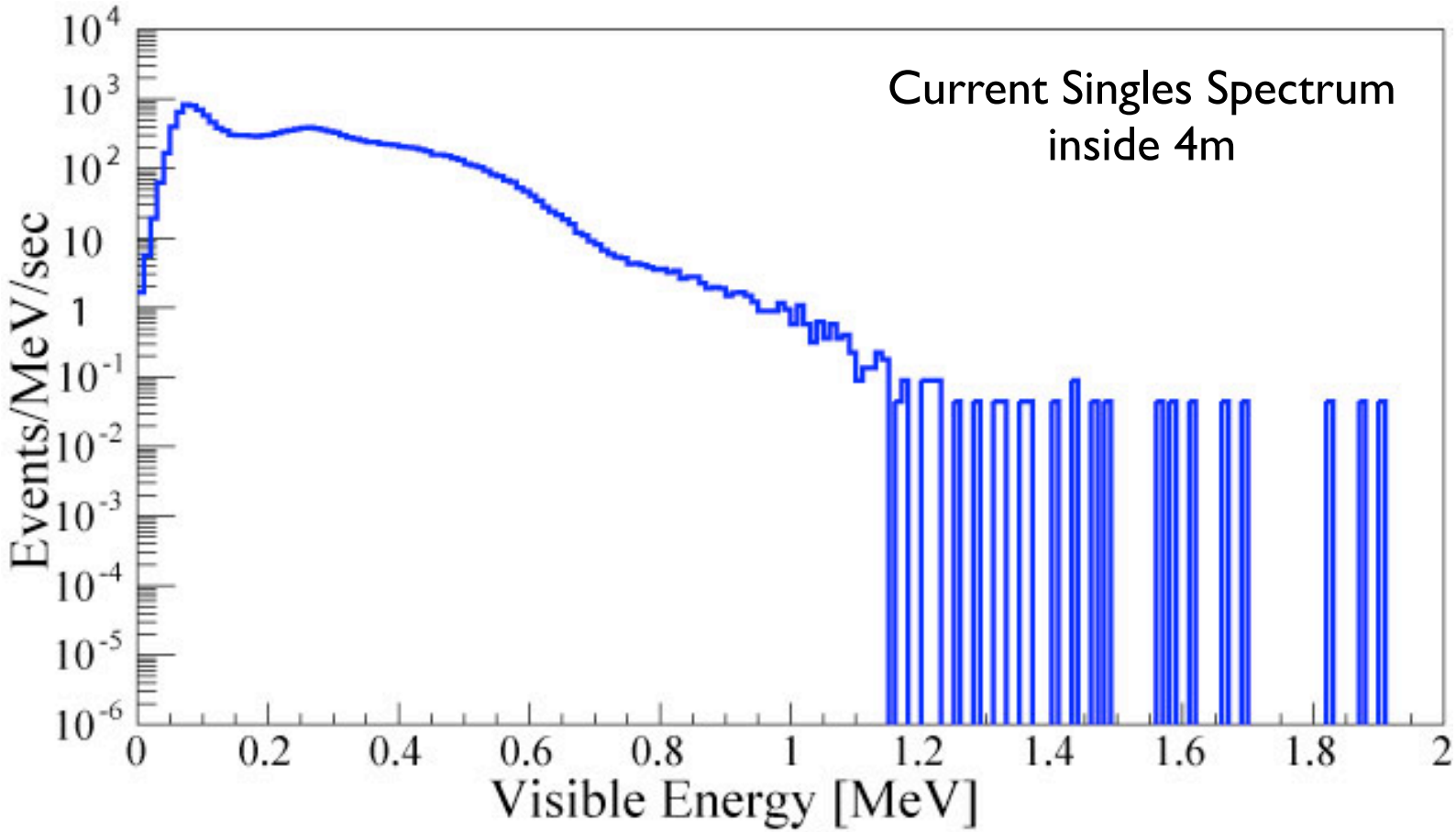

Detect through elastic scattering:

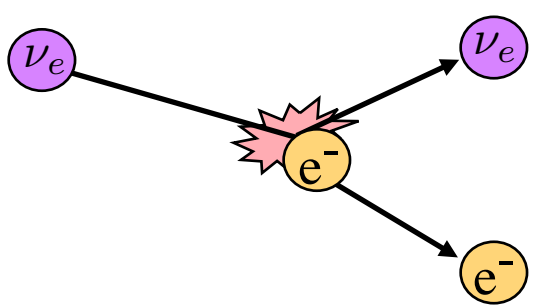

- Electron scattering: **no** delayed coincidence to suppress backgrounds
- Singles Spectrum in KamLAND
  - 4m Fiducial Volume cut suppresses external ^{40}K and ^{208}Tl

Identified Internal Backgrounds

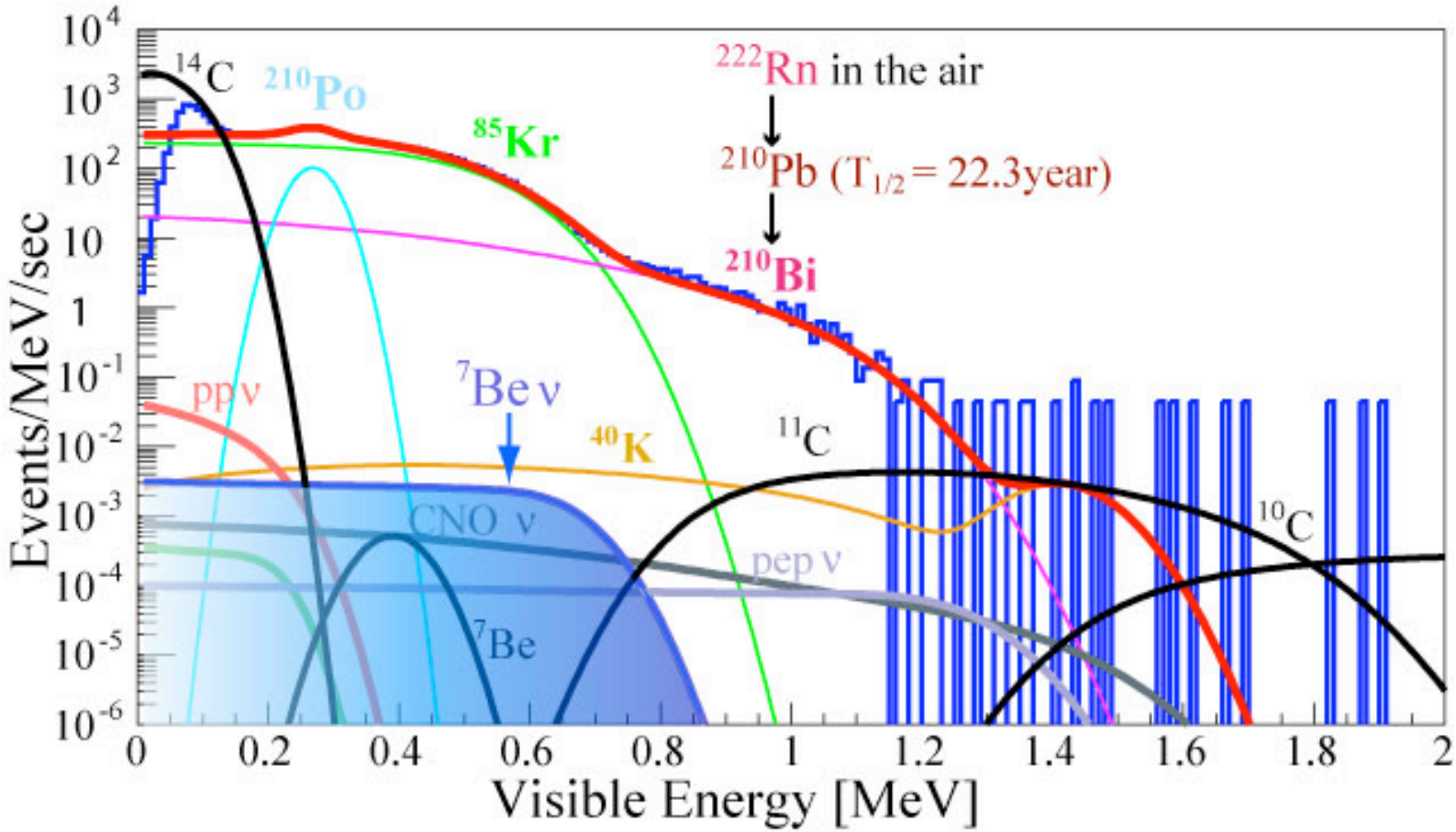

- Main background sources in the solar ^{7}Be analysis window:
  - From ^{210}Pb: ^{210}Bi & ^{210}Po
  - ^{85}Kr

Purification Levels

Isotope	$T_{1/2}$	Current Concentration	Goal	Purification Level	Method
^{210}Pb	22.5 yr	10^{-20} g/g	10^{-25} g/g	10^{-5}	Distillation
^{40}K	10^{9} yr	1.9×10^{-16} g/g	10^{-18} g/g	10^{-2}	Distillation
^{85}Kr	11 yr	700 mBq/m^3	1 μBq/m^3	10^{-6}	N_2 purging
^{238}U	10^{9} yr	3.5×10^{-18} g/g	10^{-18} g/g		
^{232}Th	10^{10} yr	5.2×10^{-17} g/g	10^{-16} g/g		
^{222}Rn	3.8 days		<1mBq/m^3		[Produces ^{210}Pb]

Liquid Scintillator Purification

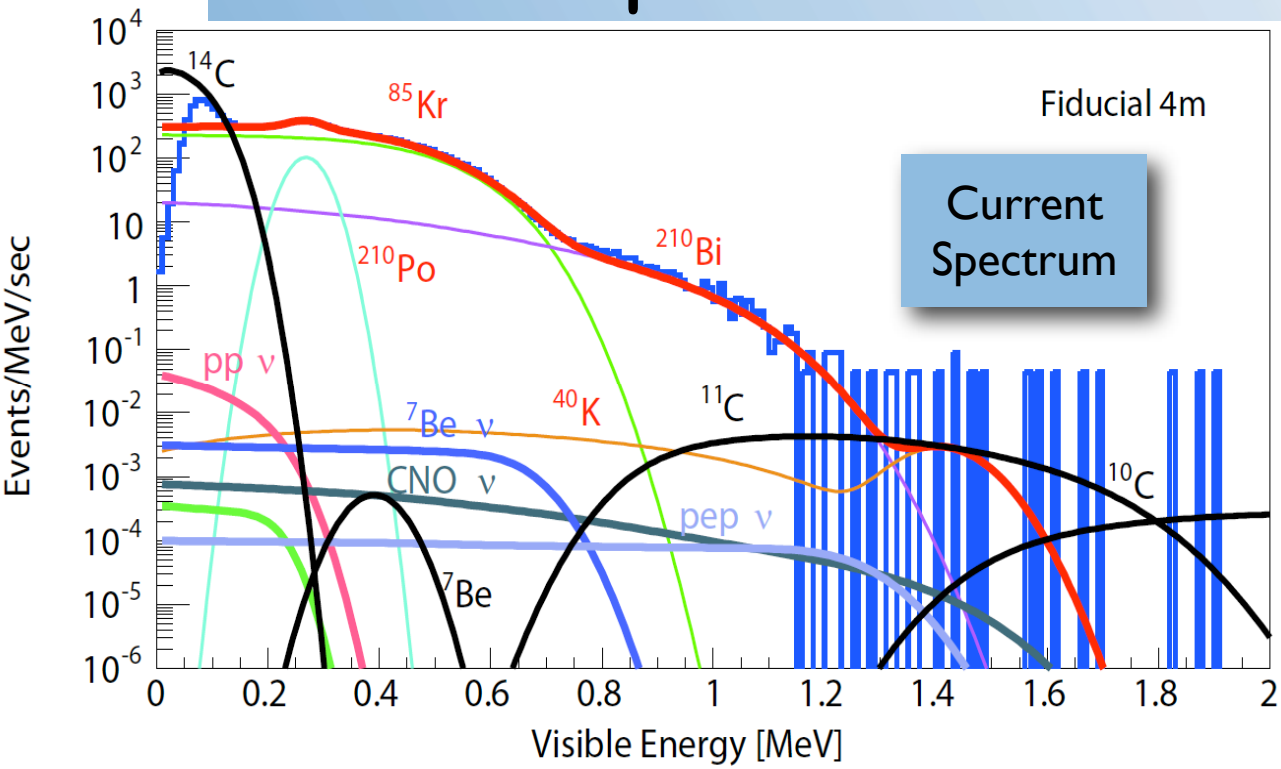

After 10^{-6} reduction in ^{210}Pb and ^{85}Kr

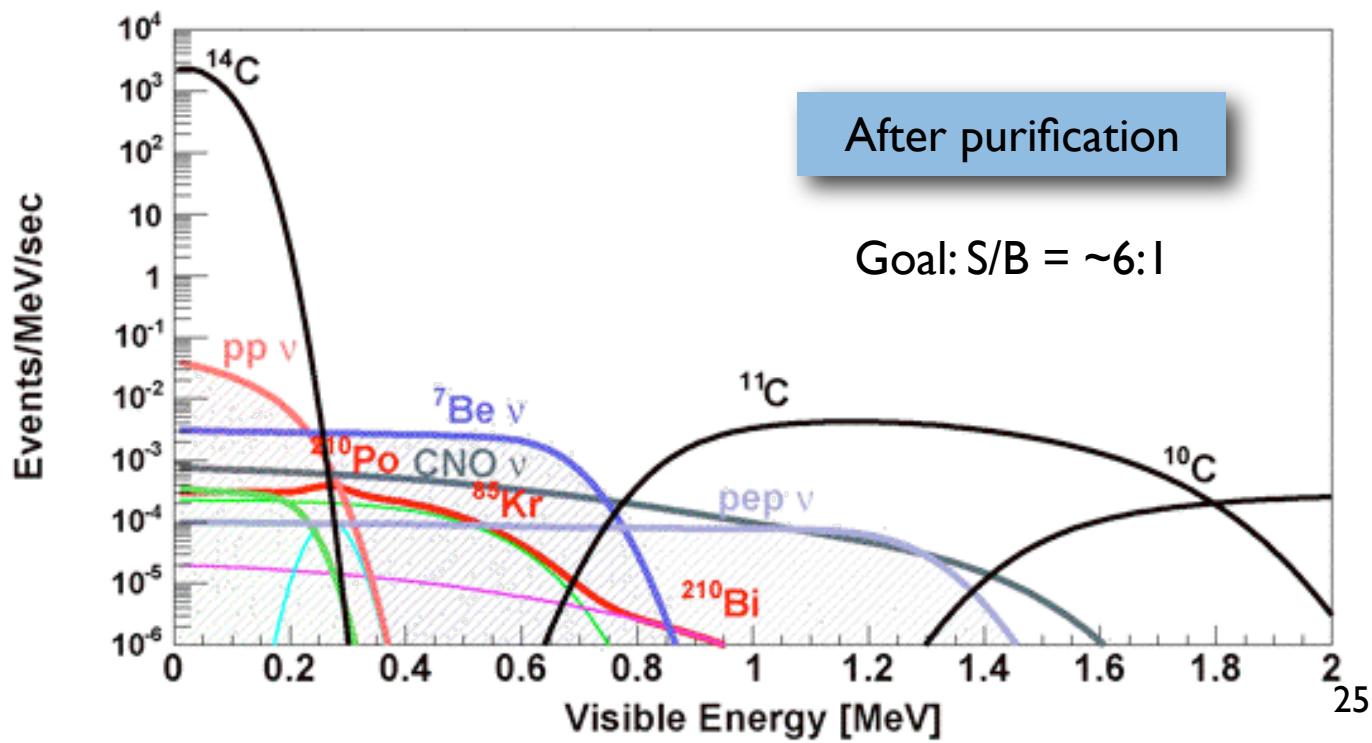

Distillation System

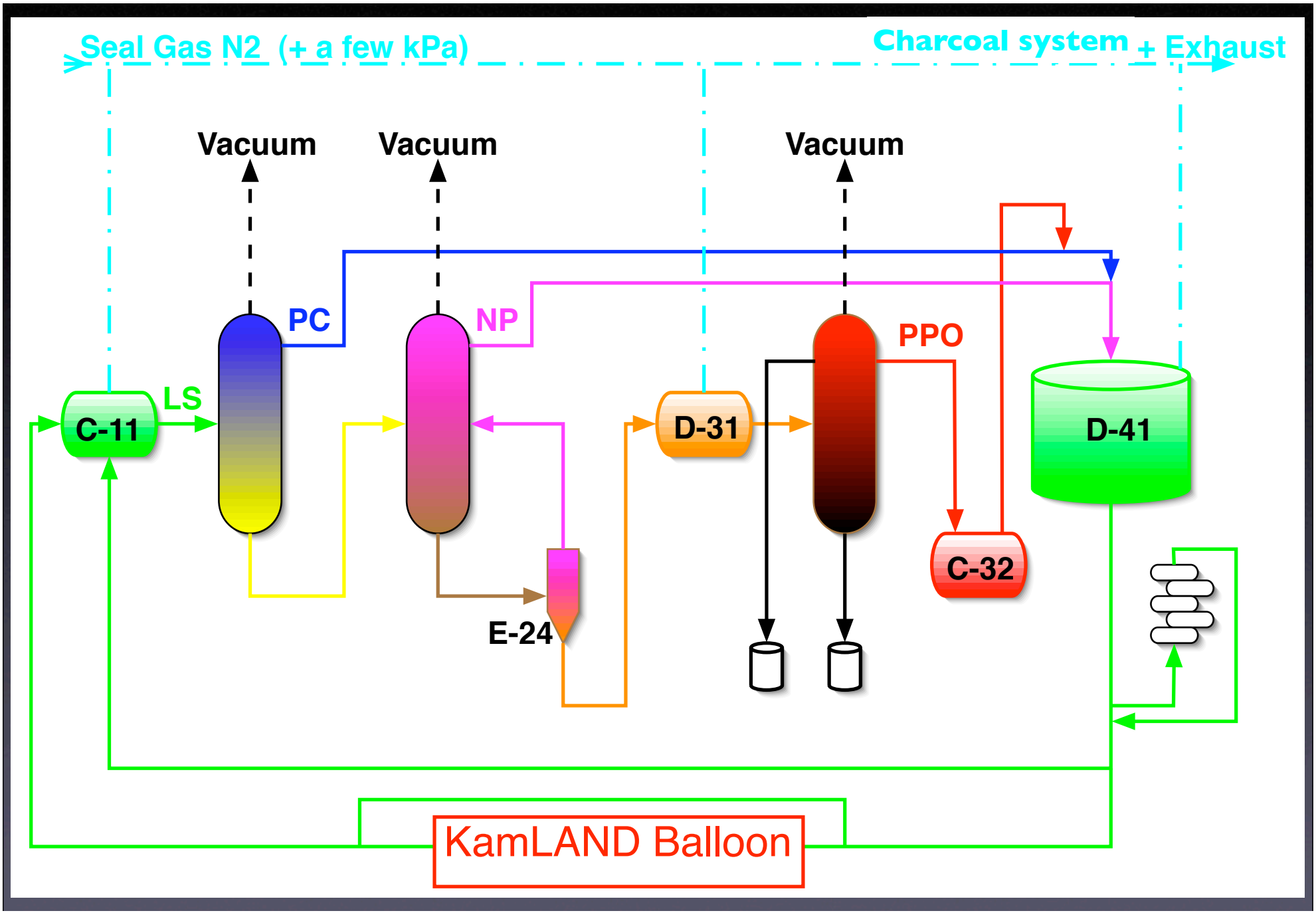

Distillation System

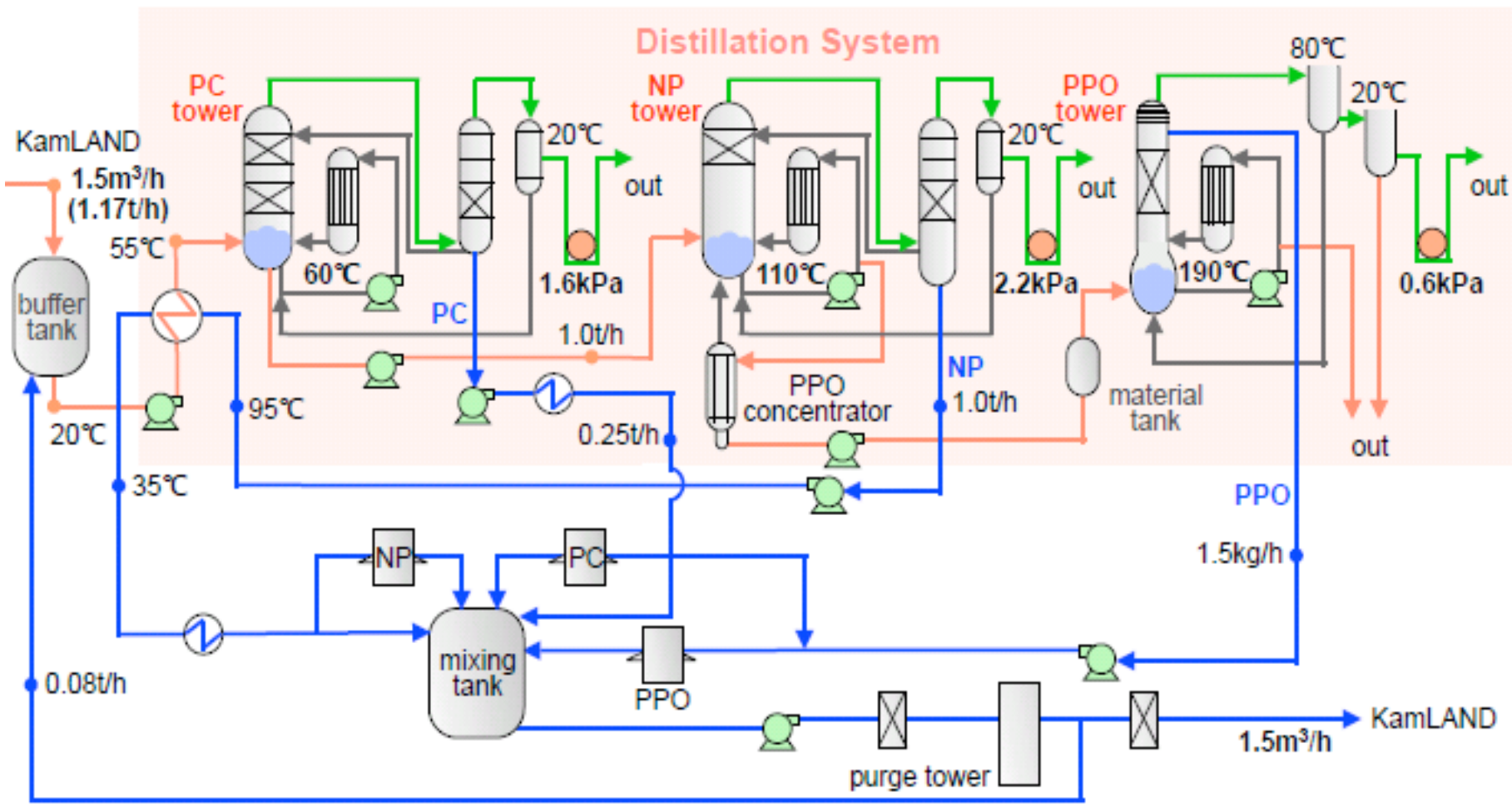

- Distillation into separate components: Pseudocumene (PC), Dodecane (NP) & PPO
  - 80% PC, 20% Dodecane, 1.52g/l PPO
- Liquid Scintillator (LS) is fed from KamLAND into a small ($2m^3$) holding tank

Distillation System

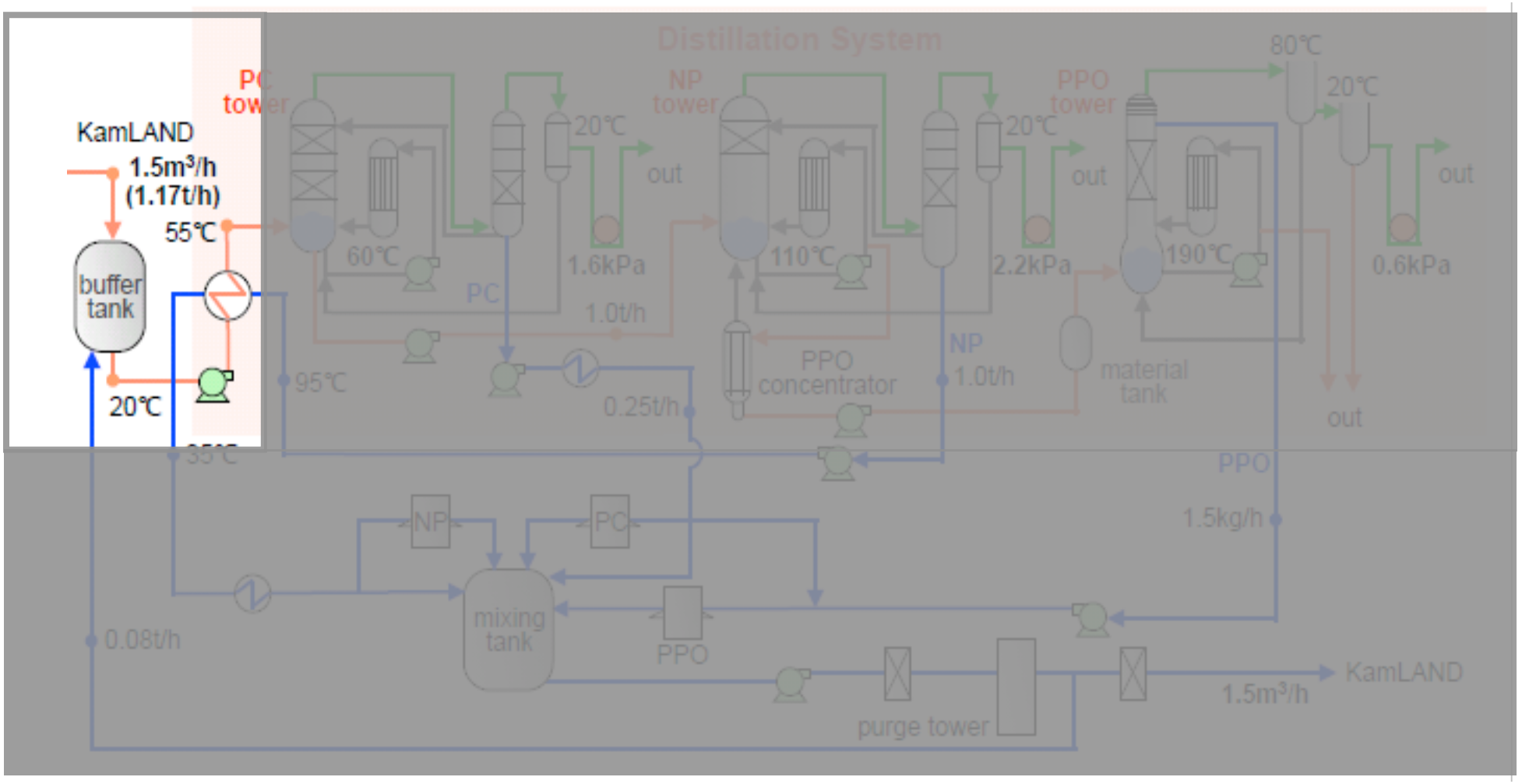

- Distillation into separate components: Pseudocumene (PC), Dodecane (NP) & PPO
  - 80% PC, 20% Dodecane, 1.52g/l PPO
- Liquid Scintillator (LS) is fed from KamLAND into a small ($2m^3$) holding tank

Distillation of Pseudocumene

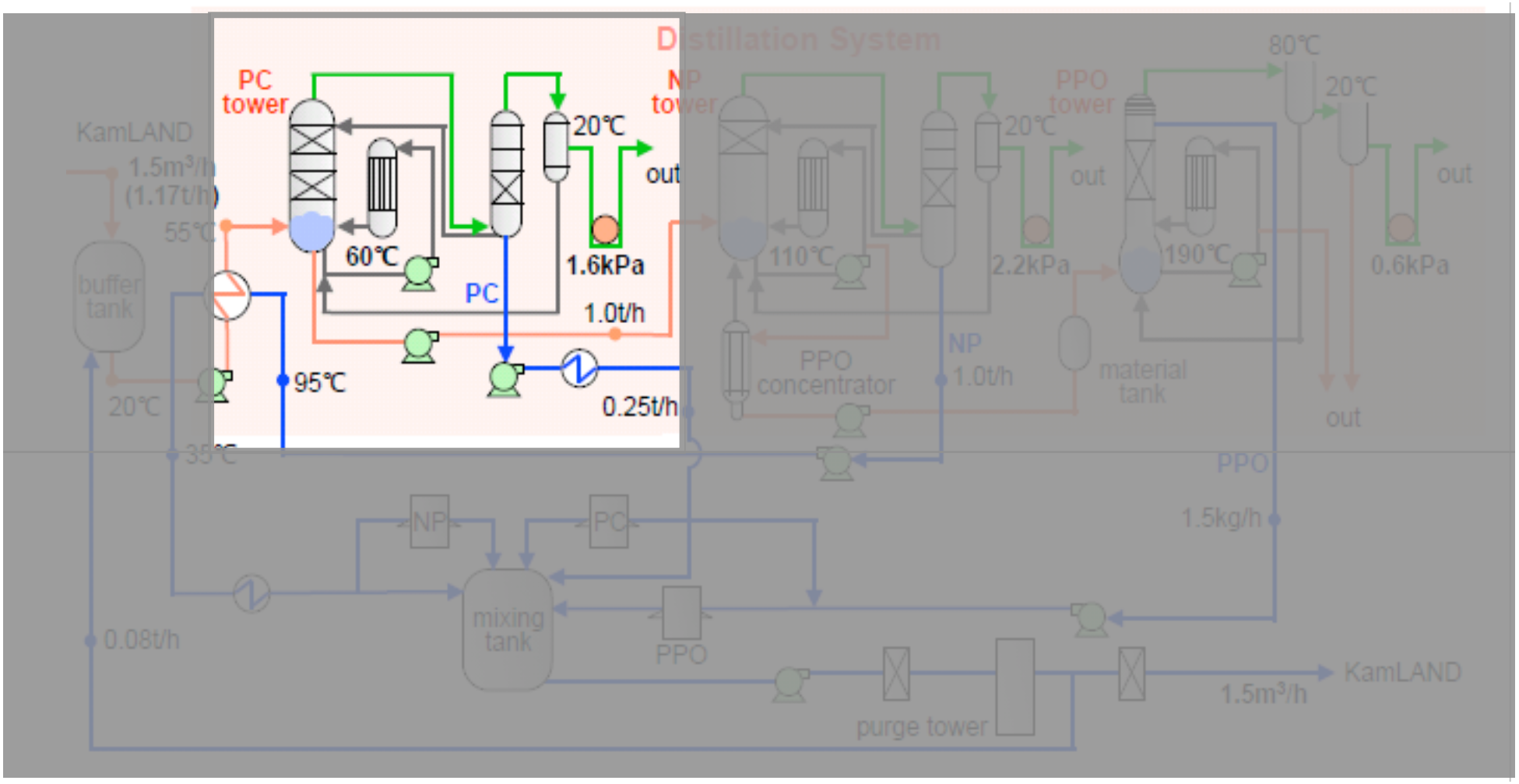

- Pseudocumene distillation in first tower
  - Boiling point: 60 degC, operating pressure ~2kPa
  - Output: ~0.25t/hr of PC
- Remainder sent to next tower

Distillation of Dodecane

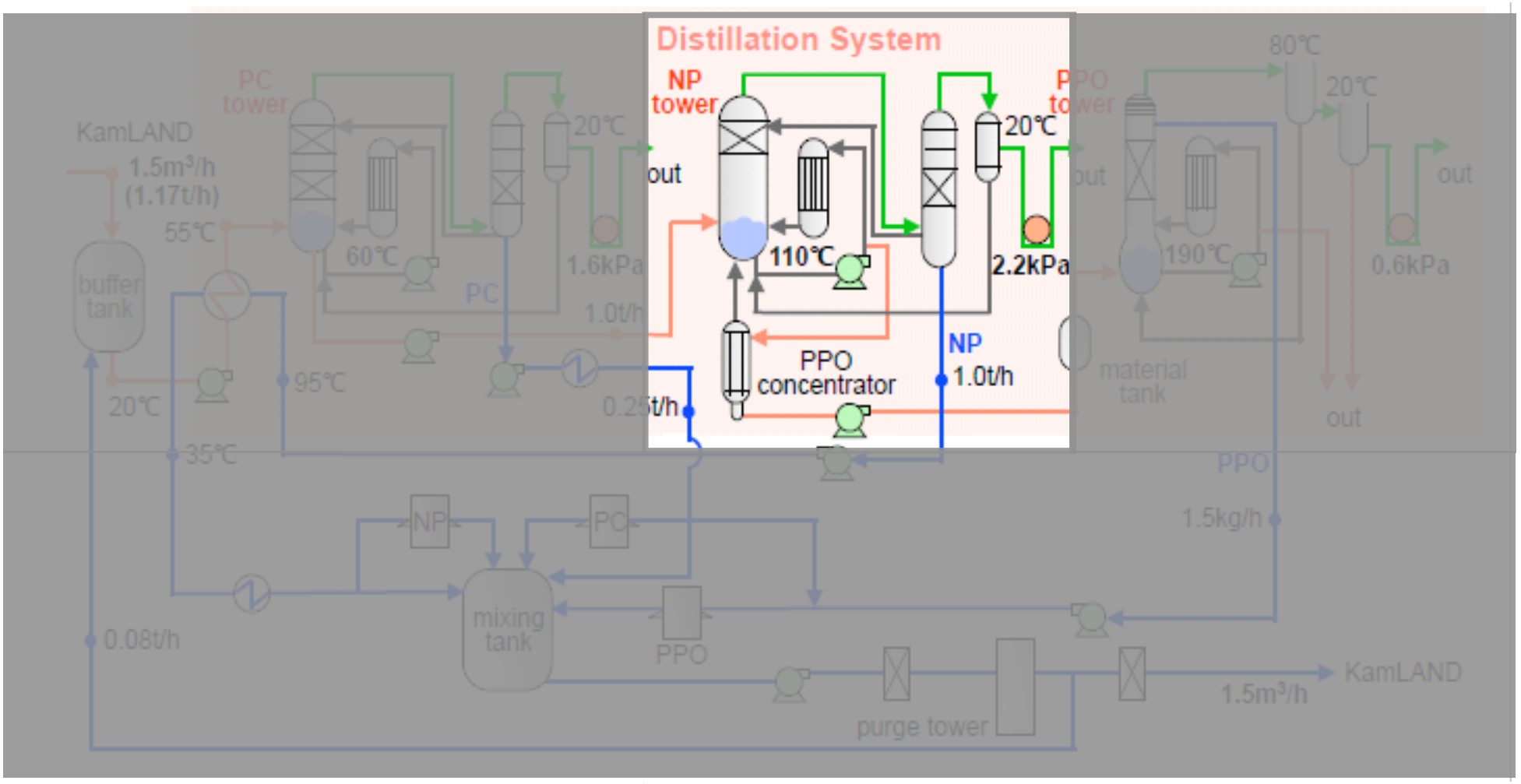

- Dodecane is distilled in the 2nd tower
  - Boiling point: ~100 degC, operating pressure ~2kPa
  - Output: ~1.0t/hr of dodecane
- Remainder in the distillation tower is further concentrated and sent to PPO tower

Distillation of PPO

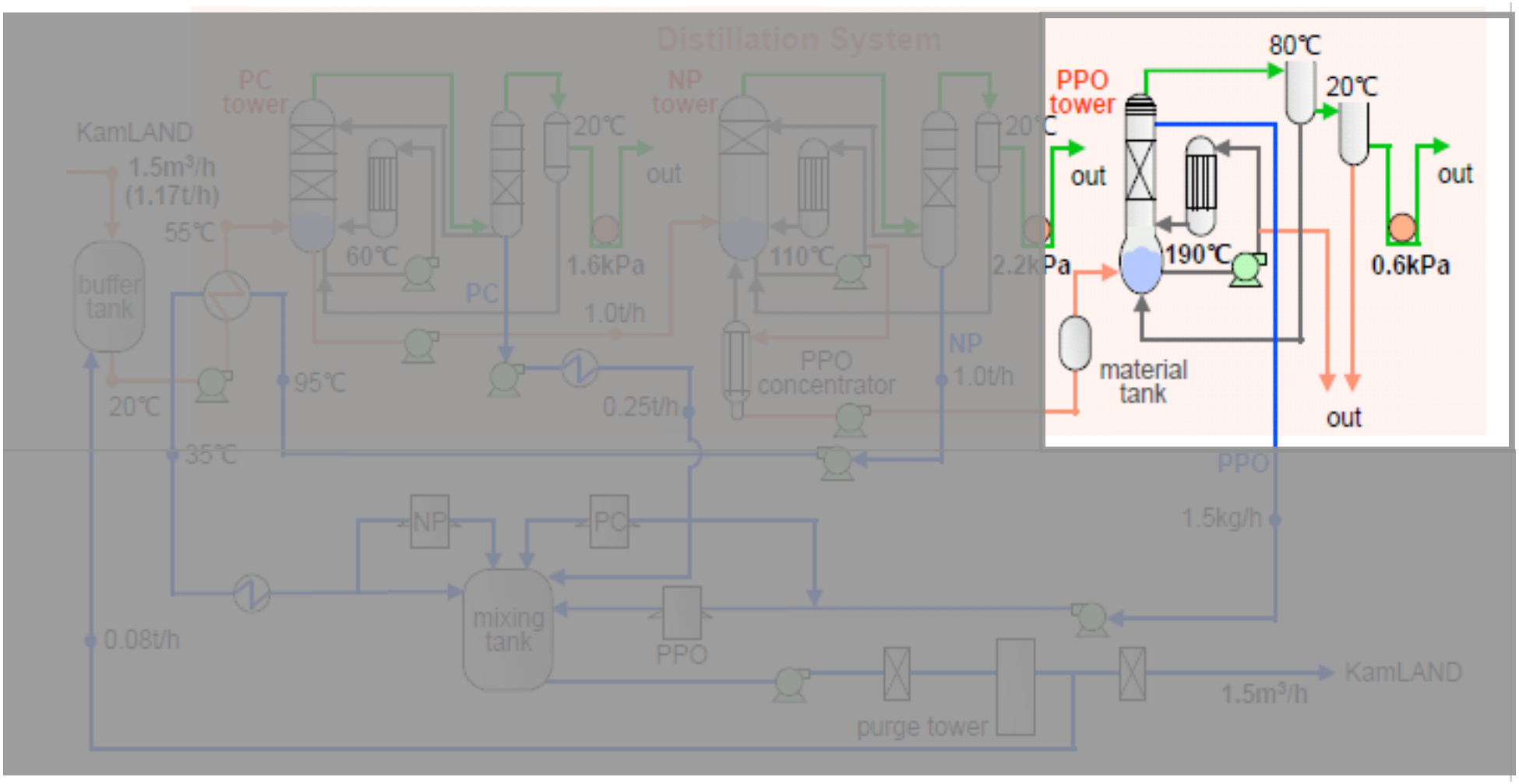

- PPO is the final step in distillation
  - Boiling point: ~190 deg C at 0.6kPa operating pressure
  - Output: 1.5kg/h
- Remainder is disposed of

Mixing of Liquid Scintillator

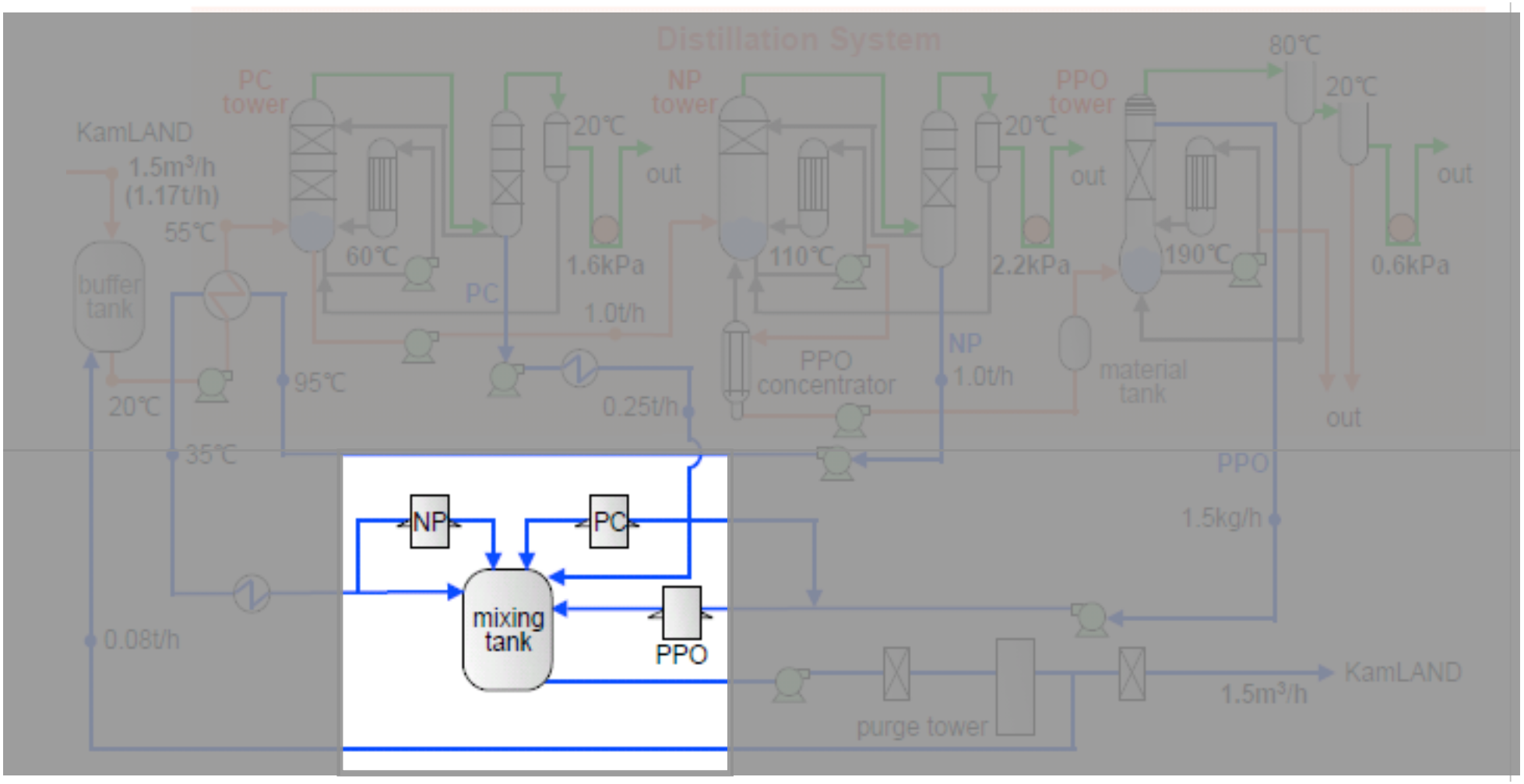

- Liquid scintillator is (re)blended from PC, NP and PPO
- Monitor temperature and density

Mixing of Liquid Scintillator

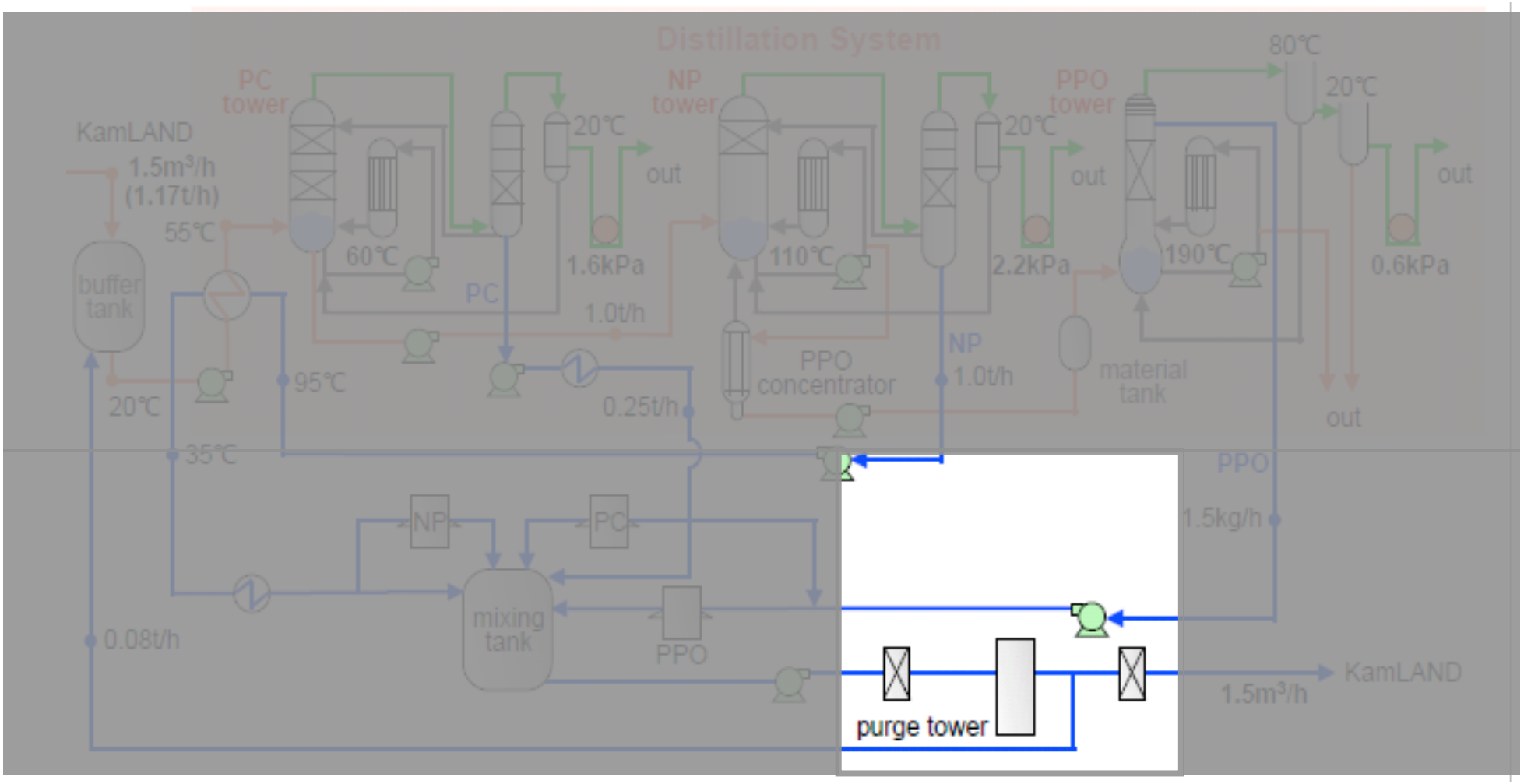

- Final step is N_2 purging of the Liquid Scintillator
- Radon Removal

Low Background Phase

System installed in the mine in 2006

Liquid Scintillator Monitoring

- Liquid Scintillator will be monitored during purification
  - Light attenuation properties
  - Rn concentration in LS
    - miniLAND (small scintillator detector monitoring BiPo coincidences)
    - Electrostatic collection after trapping
  - ^{85}Kr concentration in a trap
- Monitoring of mechanical properties (fragile balloon)
  - Precision corioli flow meters will monitor input/output flow rates
  - Muon rates in the detector (long time average)

KamLAND will remain operational during purification
- Most sensitive background monitoring tool!

Status of Distillation System

- System was installed in Fall 2006
- Engineering runs are being conducted
- Pseudocumene and Dodecane towers are successfully tested and have been run stably for several weeks
- PPO tower operates as expected, but not yet stable
- No degradation in LS after purification observed
- **Plan** once full stable operation achieved:
  - Introduce $2m^3$ of purified LS into KamLAND
  - Introduction of $50m^3$ of purified LS
  - One full volume exchange of LS (approx. 2 months)

Schedule driven by blasting in Kamioka for the XMASS cavity at the end of July - no operation during blasting

Other Measurements that will Benefit

Reactor Analysis:

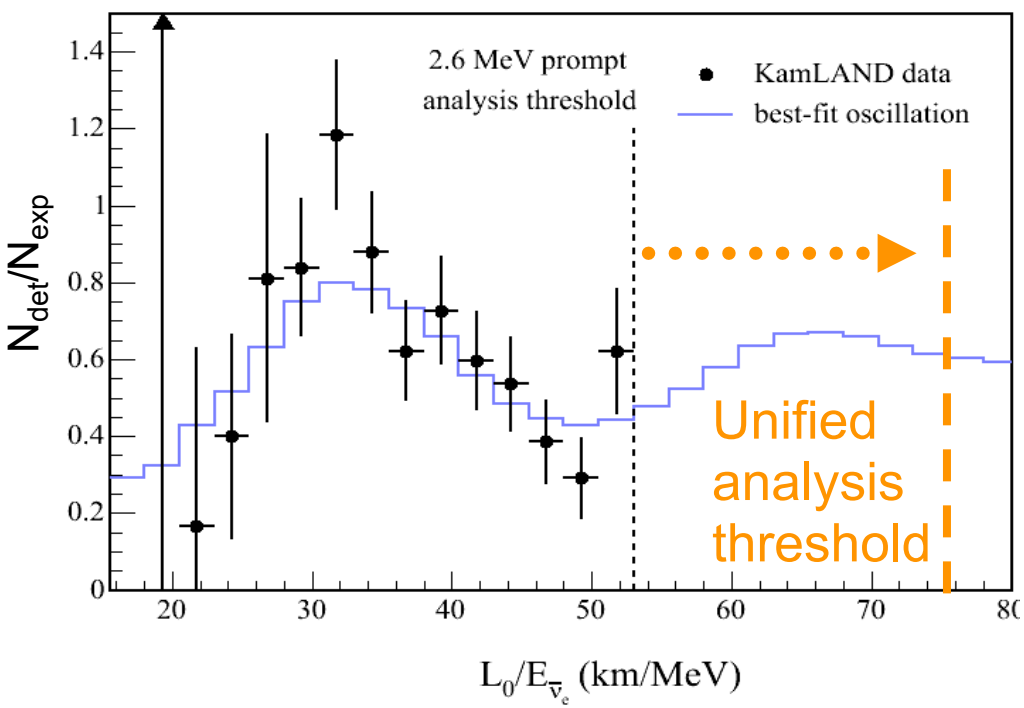

Geoneutrino Analysis:

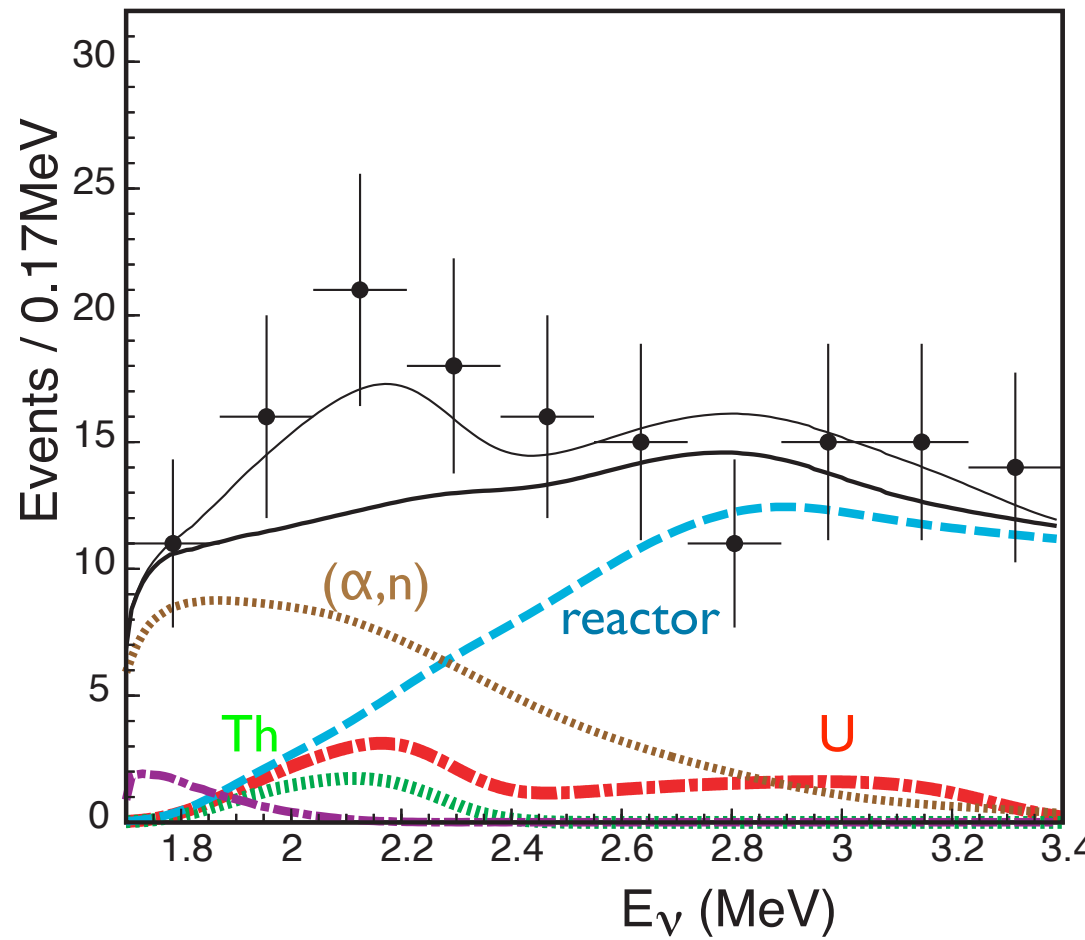

Even a modest purification level will eliminate the $^{13}C(\alpha,n)^{16}O$ background → largest BG for reactor analysis

KamLAND and Supernovae

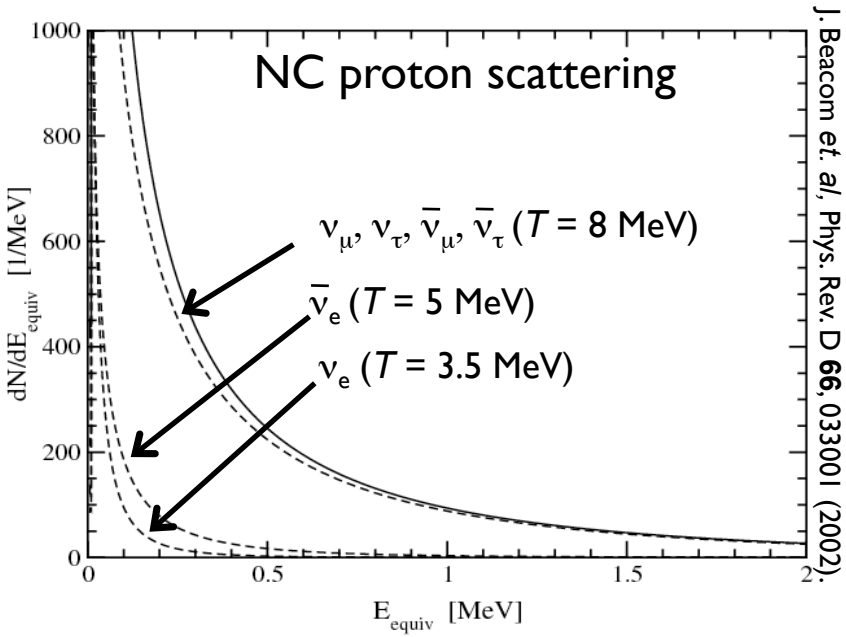

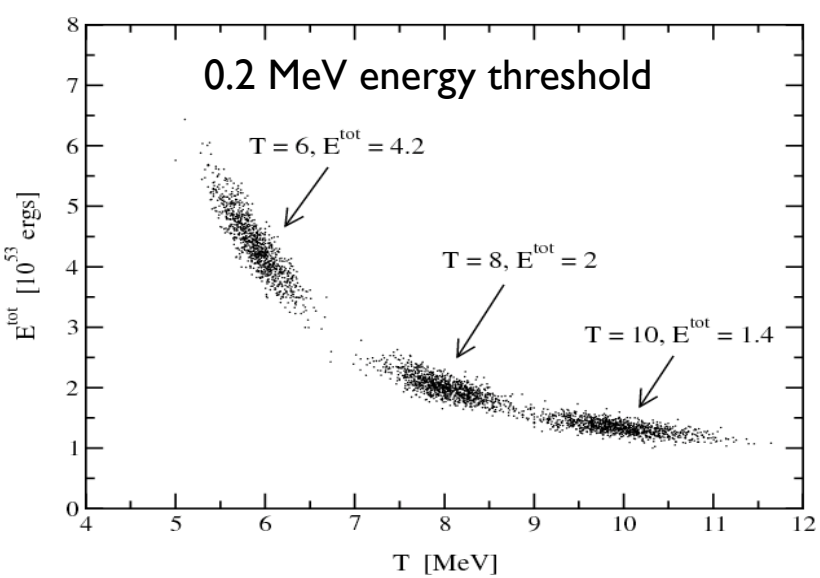

- KamLAND will measure SN antineutrinos through CC with inverse beta decay

$$\overline{\nu}_e + \mathrm{p} \rightarrow \mathrm{e}^+ + \mathrm{n}$$

- KamLAND can also observe neutrinos from a SN via NC proton scattering

$$\nu_x + \mathrm{p} \rightarrow \nu_x + \mathrm{p}$$

  - This process would be the only model independent method capable of determining the total energy and ν_x temperature.
  - KamLAND requires a factor of ~10 reduction in background at low energy to achieve this sensitivity

- Also detection through NC ^{12}C excitation

$$\nu_x +^{12}\mathrm{C} \rightarrow \nu_x +^{12}\mathrm{C}(15.11\mathrm{MeV})$$

  - Narrow peak at 15 MeV in the E spectrum

Supernova Detection

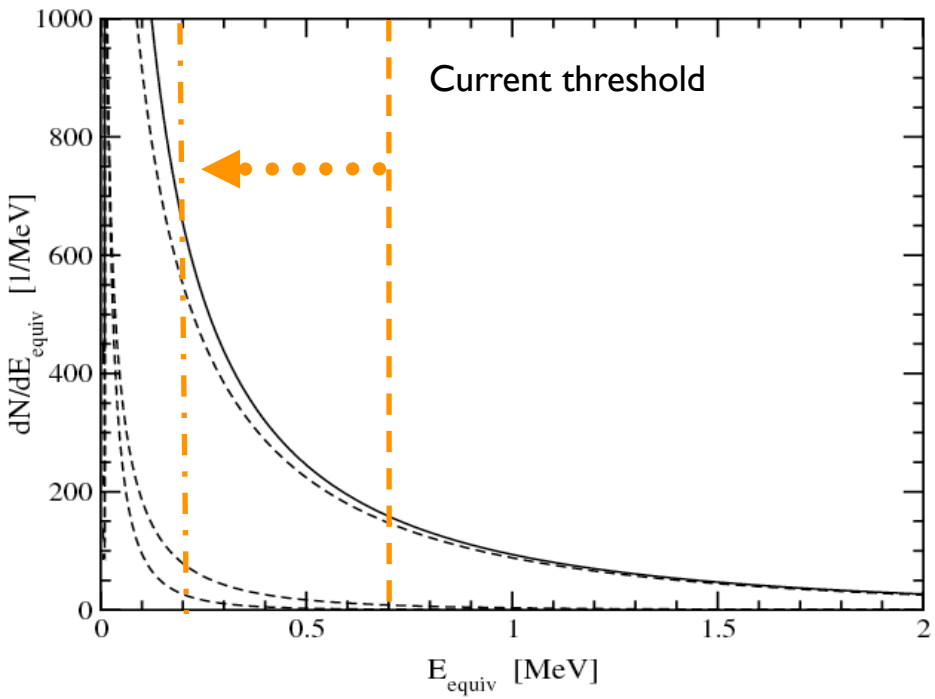

Current KamLAND SN threshold is at ~0.7MeV due to DAQ rate limitations

Assuming 1kt FV and a "Standard Supernova":

Reaction	# Events
$\overline{\nu}_e + \mathrm{p} \rightarrow \mathrm{e}^+ + \mathrm{n}$	~300
$\nu_x + \mathrm{p} \rightarrow \nu_x + \mathrm{p}$ (for 0.2MeV thr)	~270
$\nu_x + {}^{12}\mathrm{C} \rightarrow \nu_x + {}^{12}\mathrm{C}(15.11\mathrm{MeV})$	~60

← 3x more!

Summary

- KamLAND results strengthen support for "neutrino disappearance" and LMA-MSW as the solution to the Solar Neutrino Problem
- Precision measurements: best-fit KamLAND+Solar oscillation parameters are: $\Delta m^2 = 8.0^{+0.6}_{-0.4} \times 10^{-5} eV^2 \quad \tan^2\theta = 0.45^{+0.09}_{-0.07}$
- Geoneutrino detection: new tool to investigate the Earth
- **Future**: Low background phase
  - Measurement of solar ^{7}Be neutrinos: is *solar* oscillation only LMA-MSW? Investigating SSM
  - *Reactor* and *geoneutrino* measurements will continue with significantly lower backgrounds
  - Lower supernova threshold to ~0.2MeV

Invitation:

10:45AM R15.00001 Measuring ^{8}B Solar Neutrino Elastic Scattering with KamLAND , LINDLEY A. WINSLOW

KamLAND Collaboration

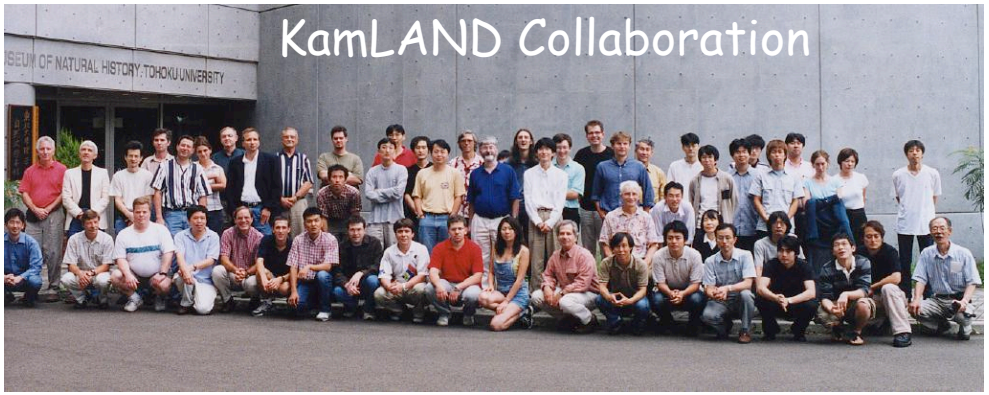

T. Araki,[1] K. Eguchi,[1] S. Enomoto,[1] K. Furuno,[1] K. Ichimura,[1] H. Ikeda,[1] K. Inoue,[1] K. Ishihara,[1,*] T. Iwamoto,[1,†] T. Kawashima,[1] Y. Kishimoto,[1] M. Koga,[1] Y. Koseki,[1] T. Maeda,[1] T. Mitsui,[1] M. Motoki,[1] K. Nakajima,[1] H. Ogawa,[1] K. Owada,[1] J.-S. Ricol,[1] I. Shimizu,[1] J. Shirai,[1] F. Suekane,[1] A. Suzuki,[1] K. Tada,[1] O. Tajima,[1] K. Tamae,[1] Y. Tsuda,[1] H. Watanabe,[1] J. Busenitz,[2] T. Classen,[2] Z. Djurcic,[2] G. Keefer,[2] K. McKinny,[2] D.-M. Mei,[2,‡] A. Piepke,[2] E. Yakushev,[2] B.E. Berger,[3] Y.D. Chan,[3] M.P. Decowski,[3] D.A. Dwyer,[3] S.J. Freedman,[3] Y. Fu,[3] B.K. Fujikawa,[3] J. Goldman,[3] F. Gray,[3] K.M. Heeger,[3] K.T. Lesko,[3] K.-B. Luk,[3] H. Murayama,[3,§] A.W.P. Poon,[3] H.M. Steiner,[3] L.A. Winslow,[3] G.A. Horton-Smith,[4,¶] C. Mauger,[4] R.D. McKeown,[4] P. Vogel,[4] C.E. Lane,[5] T. Miletic,[5] P.W. Gorham,[6] G. Guillian,[6] J.G. Learned,[6] J. Maricic,[6] S. Matsuno,[6] S. Pakvasa,[6] S. Dazeley,[7] S. Hatakeyama,[7] A. Rojas,[7] R. Svoboda,[7] B.D. Dieterle,[8] J. Detwiler,[9] G. Gratta,[9] K. Ishii,[9] N. Tolich,[9] Y. Uchida,[9,**] M. Batygov,[10] W. Bugg,[10] Y. Efremenko,[10] Y. Kamyshkov,[10] A. Kozlov,[10] Y. Nakamura,[10] C.R. Gould,[11] H.J. Karwowski,[11] D.M. Markoff,[11] J.A. Messimore,[11] K. Nakamura,[11] R.M. Rohm,[11] W. Tornow,[11] R. Wendell,[11] A.R. Young,[11] M.-J. Chen,[12] Y.-F. Wang,[12] and F. Piquemal[13]

(The KamLAND Collaboration)

[1]*Research Center for Neutrino Science, Tohoku University, Sendai 980-8578, Japan*
[2]*Department of Physics and Astronomy, University of Alabama, Tuscaloosa, Alabama 35487, USA*
[3]*Physics Department, University of California at Berkeley and Lawrence Berkeley National Laboratory, Berkeley, California 94720, USA*
[4]*W. K. Kellogg Radiation Laboratory, California Institute of Technology, Pasadena, California 91125, USA*
[5]*Physics Department, Drexel University, Philadelphia, Pennsylvania 19104, USA*
[6]*Department of Physics and Astronomy, University of Hawaii at Manoa, Honolulu, Hawaii 96822, USA*
[7]*Department of Physics and Astronomy, Louisiana State University, Baton Rouge, Louisiana 70803, USA*
[8]*Physics Department, University of New Mexico, Albuquerque, New Mexico 87131, USA*
[9]*Physics Department, Stanford University, Stanford, California 94305, USA*
[10]*Department of Physics and Astronomy, University of Tennessee, Knoxville, Tennessee 37996, USA*
[11]*Triangle Universities Nuclear Laboratory, Durham, North Carolina 27708, USA and Physics Departments at Duke University, North Carolina State University, and the University of North Carolina at Chapel Hill*
[12]*Institute of High Energy Physics, Beijing 100039, People's Republic of China*
[13]*CEN Bordeaux-Gradignan, IN2P3-CNRS and University Bordeaux I, F-33175 Gradignan Cedex, France*